Filter, Series AS5-FLS

R412009012

2024-03-20

Series AS5

The AVENTICS Series AS5 is a modular, versatile maintenance unit for universal application. This Series offers compact dimensions, is highly efficient, lightweight and easy-to-use. The AVENTICS Series AS guarantees reliability, safety, and efficiency with a simplified assembly and maintenance efforts.



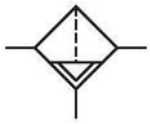

Technical data

Industry	Industrial
Parts	Filter
Reservoir	reservoir, polycarbonate, with PA protective guard
Port	G 1
Filter porosity	40 µm
Nominal flow Qn	7800 l/min
Condensate drain	semi-automatic, open without pressure
Min. working pressure	1.5 bar
Max. working pressure	16 bar
Min. ambient temperature	-10 °C
Max. ambient temperature	50 °C
Medium	Compressed air Neutral gases
Max. achievable compressed air class acc. to ISO 8573-1:2010	7 : 7 : -
Filter reservoir volume	87 cm³
Filter element	exchangeable
Weight	0.718 kg
Mounting orientation	vertical

Filter, Series AS5-FLS

2024-03-20

R412009012

Type	Can be assembled into blocks

Material

Housing material	Polyamide
Material front plate	Acrylonitrile butadiene styrene
Seal material	Acrylonitrile butadiene rubber
Material threaded bushing	Die cast zinc
Material reservoir	Polycarbonate
Material protective guard	Polyamide
Material filter insert	Sintered bronze
Part No.	R412009012

Technical information

The pressure dew point must be at least 15 °C less than ambient and medium temperature and may not exceed 3 °C.

Note: Polycarbonate reservoirs are susceptible to solvents, supplementary information can be found at "Customer information".

A change in the flow direction (from air supply on the left to air supply on the right) occurs by rotating installation by 180° about the vertical axis. Please see the operating instructions for further details.

Also suitable for separation of fluid oil or water due to the design.

Filter, Series AS5-FLS

R412009012

2024-03-20

Dimensions

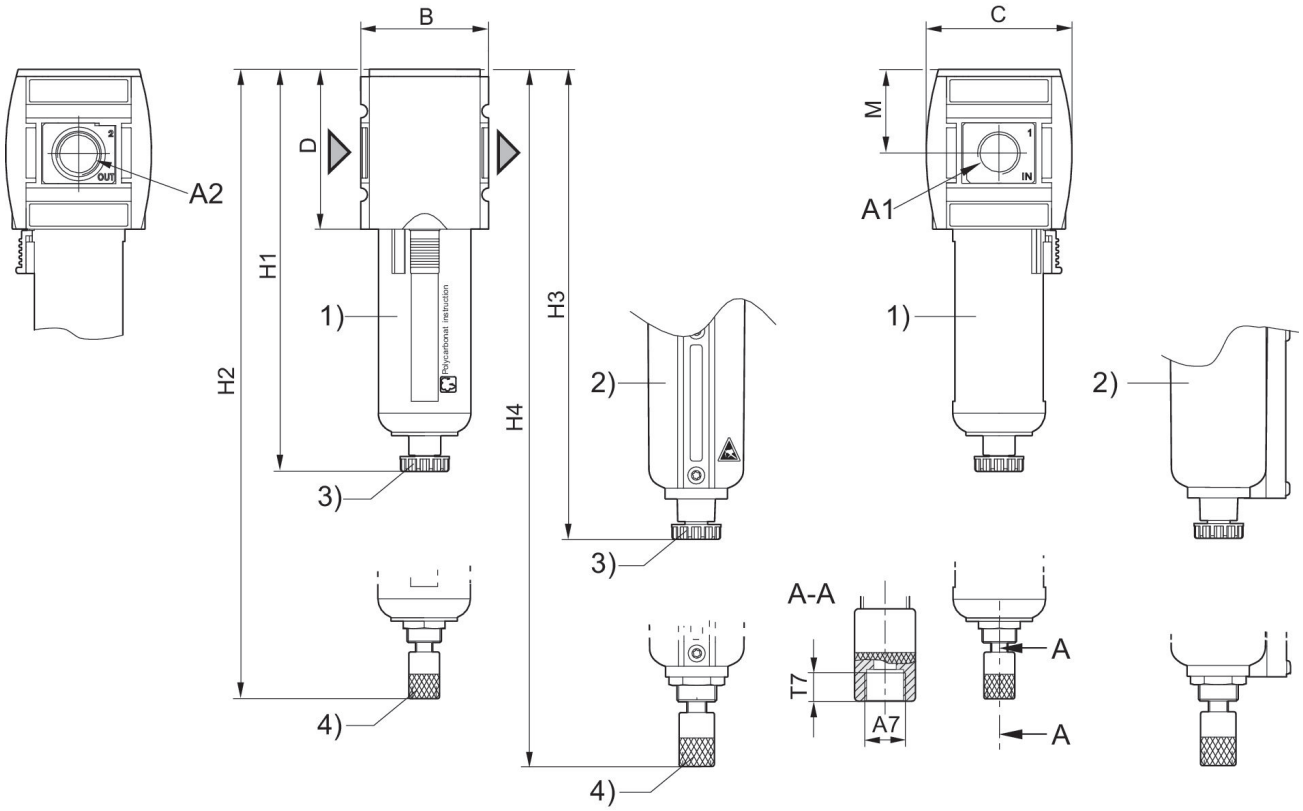

A1 = input A2 = output
A7 = condensate drain
1) Plastic reservoir and protective guard with window
2) Metal reservoir with level indicator
3) Semi-automatic condensate drain
4) Fully automatic condensate drain

Dimensions in mm

Part No.	A1	A2	A7	B	C	D	H1	H2	H3
R412009003	G 3/4	G 3/4	G 1/8	85	103	109	250	266	254
R412009004	G 3/4	G 3/4	G 1/8	85	103	109	250	266	254
R412009005	G 3/4	G 3/4	G 1/8	85	103	109	250	266	254
R412009012	G 1	G 1	G 1/8	85	103	109	250	266	254
R412009013	G 1	G 1	G 1/8	85	103	109	250	266	254
R412009014	G 1	G 1	G 1/8	85	103	109	250	266	254

Part No.	H4	M	T7
R412009003	270.5	58	8.5
R412009004	270.5	58	8.5
R412009005	270.5	58	8.5
R412009012	270.5	58	8.5
R412009013	270.5	58	8.5
R412009014	270.5	58	8.5

Flow rate characteristic, p2 = 0,05 - 7 bar

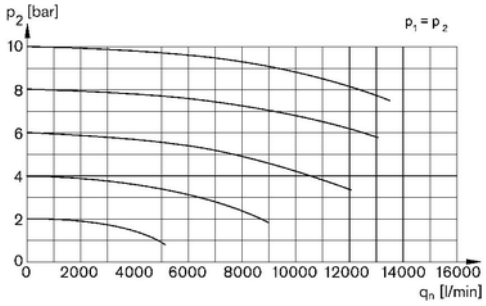

p1 = Working pressure p2 = Secondary pressure qn = Nominal flow

Accessories overview

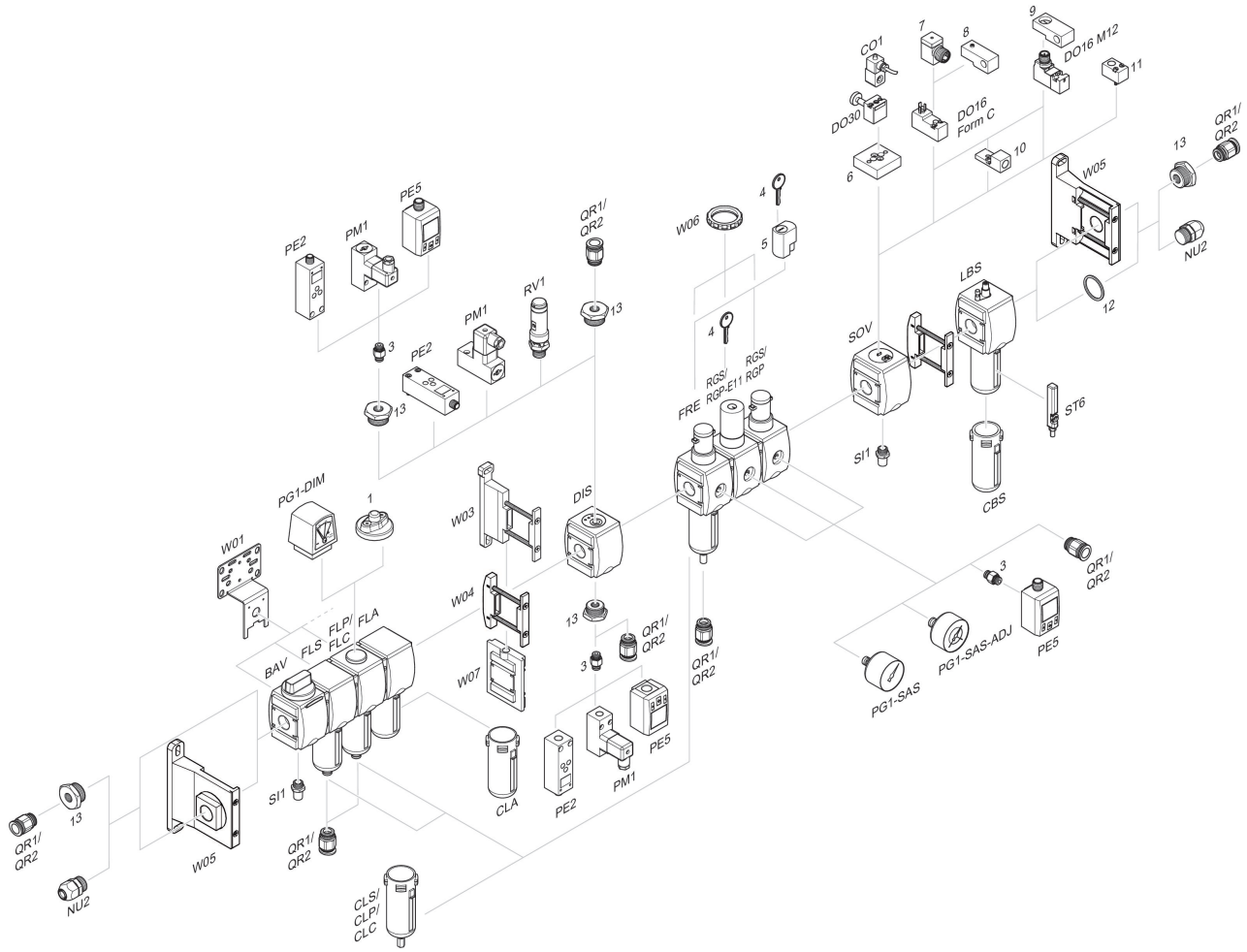

1 = contamination display 3 = Double nipple 4 = Key for E11 locking 5 = mortise lock 6 = Transition plate DO30 7 = Adapter, Series CON-VP 8 = Mounting aid DO16, form C 9 = Mounting aid DO16, M12 10 = Adapter for external pilot air 11 = Adapter pneumatic operation 12 = Sealing ring 13 = Reducing nipple