efector600

TP9237

TP- CEC -B-DVG/US/

Evaluation systems

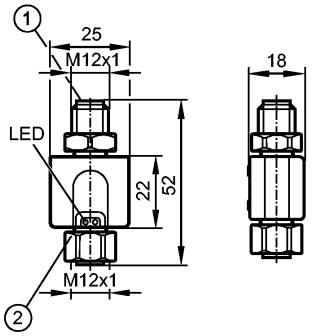

1: connection for voltage supply and output signals
2: connection for temperature sensor

CE cULus LISTED IO-Link

Product characteristics		
Measured signal converter for temperature sensors		
for Pt100 and Pt1000 measuring elements		
Analog output 0...10 V		
Measuring range: -50...300 °C / -58...572 °F		
Factory setting: 0...100 °C		

Electrical data		
Electrical design		DC
Operating voltage	[V]	18...32 DC
Protection class		III
Reverse polarity protection		yes

Outputs		
Output		Analog output 0...10 V
Output function		0...10 V analog
Short-circuit protection		yes (non-latching)
Overload protection		yes
Analog output		0...10 V; Rmin: 2000 Ω

Measuring / setting range			
Measuring range		-50...300 °C	-58...572 °F
Factory setting		0...100 °C	

Accuracy / deviations		
Analog output	[K]	± 0.3 + (± 0.1 % MS)
Temperature coefficients (in % of the span per 10 K)		0.1
Measured value via IO-Link	[K]	± 0.3 + (± 0.1 % MS)

Reaction times		
Power-on delay time	[s]	1
Measuring / display cycle	[ms]	100
Integrated watchdog		yes

Interfaces		
IO-Link Device		
Transfer type		COM2 (38.4 kBaud)
IO-Link revision		1.1

Environment

efector600

TP9237

TP- CEC -B-DVG/US/

Evaluation systems

Ambient temperature	[°C]	-25...70
Storage temperature	[°C]	-40...85
Protection		IP 67

Tests / approvals

EMC		EN 61326-1
Shock resistance		DIN IEC 68-2-27: 50 g (11 ms)
Vibration resistance		DIN IEC 68-2-6: 20 g (10...2000 Hz)
MTTF	[Years]	505.11

Mechanical data

Housing materials		PA PACM 12 (TROGAMID); PET; sealing: FPM (Viton); nut: stainless steel 316L / 1.4404; connector: TPU (urethane)
Weight	[kg]	0.04

Electrical connection

Connection		M12 connector; gold-plated contacts

Wiring



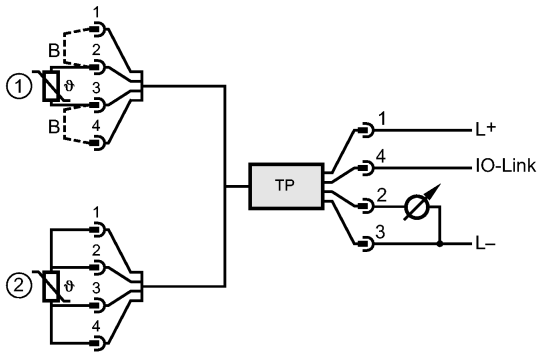

1: Two-wire sensor
2: Four-wire sensor
B: bridge

Remarks

Remarks		cULus - Class 2 source required The measuring range can be scaled: -50... 300 °C / -58...572 °F MS = set measuring span
Pack quantity	[piece]	1