

Low Voltage Switches

Switches
Switch fuses
OS32...160 A Gamma series

Power and productivity
for a better world™

Switch fuses for extreme conditions - OS 32…160 Gamma series

Numerous applications require switch fuses that can withstand extreme conditions. High voltages and high short circuit currents create a demand for superior performance without neglecting safety.



Our new series comprises of two frame sizes OS32G_...63G_ and OS100G_...160G_.

Superior performance

- High U_i ratings
- High CTI in supporting parts
- The contact constructions are optimal, regardless of fuse type, DIN, BS, NFC or UL-type
- Meets the requirements for installation close to the main transformer up to 100 kA in heavy industry and in ships

- High performance level and smart design makes OS Gamma switch fuses suitable for all applications in low voltage networks.



Compact construction

- Intelligent construction in combination with a small number of components results in a very compact mechanism design
- Very small footprint area

- Space savings mean cost reduction!



Designed for safety

- The frame is made of robust plastic with excellent mechanical and thermal properties.
- Voltage output pins (as standard)
- Pole markings as standard
- The fuse covers cannot be opened while the switch fuse is in the ON-position and can be sealed in the closed position.

- You take no risks with OS32…160 Gamma switch fuses

Switch fuses OS32G_...160G_
Technical data

Technical data according to IEC 60947-3

				OS	OS	OS	OS	OS	OS
		Switch size	A	32	50	63	100	125	160
Rated insulation voltage	Pollution degree 3		V	1 000	1 000	1 000	1 000	1 000	1 000
Dielectric strength		50 Hz 1min.	kV	10	10	10	10	10	10
Rated thermal current in ambient 40 °C [2] /	In open air		A/W	32/7.5	50/7.5	63/7.5	100/12	125/12	160/12
max. fuse power dissipation[1]	In enclosure		A/W	32/7.5	50/7.5	63/7.5	100/12	125/12	160/12
...with minimum cable cross section		Cu	mm^2	6	10	16	50	50	70
Rated operational voltage AC-20 and DC-20			V	1 000	1 000	1 000	1 000	1 000	1 000
Rated operational current, AC-21, AC-22 and AC 23			A	32	50	63	100	125	160
Rated operational current / poles in series DC-21A		48 V	A	32/2	50/2	63/2	100/2	125/2	160/2
		110-220 V	A	32/2*	50/2*	63/2*	100/2*	125/2*	125/2*
		440 V	A	32/4*	50/4*	50/4*	100/4*	125/4*	125/4*
Rated operational current / poles in series DC-22A		48 V	A	32/2	50/2	63/2	100/2	125/2	160/2
		110-220 V	A	32/2*	50/2*	63/2*	100/2*	125/2*	125/2*
Rated operational current / poles in series DC-23A		48 V	A	32/2	50/2	63/2	100/2	125/2	160/2
		110-220 V	A	32/2*	50/2*	63/2*	100/2*	125/2*	125/2*
Rated operational power, AC-23[4]		230 V	kW	7.5	11	18.5	30	37	45
The kW-ratings are accurate		400 V	kW	15	22	30	55	55	75
for three-phase 1500 R.P.M.		415 V	kW	15	22	30	55	55	75
standard asynchronous motors.		500 V	kW	18.5	30	37	55	75	90
		690 V	kW	22	37	55	90	110	132
Rated breaking capacity in category AC-23		up to 690 V	A	504	504	504	1 280	1280	1280
Rated breaking capacity / poles in series in category DC-23		up to 220 V	A	252/2	252/2	252/2	640/2	640/2	640/2
Rated conditional short-circuit current	I_p (r.m.s.)	80 kA, 415 V	kA	13.5	13.5	13.5	23.5	23.5	23.5
I_p (r.m.s.) and corresponding max. allowed	Fuse size	gG/aM	A	80/63	80/63	80/63	160/160	160/160	160/160
cut-off current $\hat{i}_c$	I_p (r.m.s.)	100 kA, 500 V	kA	12.5	12.5	12.5	25.5	25.5	25.5
	Fuse size	gG/aM	A	63/63	63/63	63/63	160/160	160/160	160/160
	I_p (r.m.s.)	80 kA, 690 V	kA	11.5	11.5	11.5	20.5	20.5	20.5
	Fuse size	gG/aM	A	63/63	63/63	63/63	125/160	125/160	125/160
Rated short-time withstand current, 1s	r.m.s. -value		kA	2.5	2.5	2.5	5	5	5
Rated capacitor power [5]		400/415/690 V	A	15/15/25	20/25/42	25/32/50	40/42/75	50/55/90	60/65/100
Power loss / pole	With rated current, without fuse		W	1	2.5	4	4	5	9
Mechanical endurance	Divide by two for oper. cycles		Oper.	20 000	20 000	20 000	20 000	20 000	20 000
Fuse types, IEC 60269-2-1	DIN 43620			000		000		000, 00	000, 00
	NFC 63210, 63211				14x51			22x58	
	BS 88-2, -6 -size /			A2-A3		A2-A3	A2-A4[3]	A2-A4[3]	A2-A4[3]
	distance of fuse-link bolts		mm	M5/73		M5/73	M5/73, M8/94	M5/73, M8/94	M5/73, M8/94
Weight without accessories	3-pole switch fuses		kg	1.3	1.3	1.3	1.5	1.5	1.5
	4-pole switch fuses		kg	1.6	1.6	1.6	1.8	1.8	1.8
Built-in terminal size		Cu	mm^2	2.5...25	2.5...25	2.5...25			
Terminal bolt size (included)	Metric thread diameter x length		mm				M8x25	M8x25	M8x25
Terminal tightening torque	Counter torque required		Nm	4	4	4	15-22	15-22	15-22
Fuse-links bolts tightening torque			Nm	3.5		3.5	M5:3.5 M8:5	M5:3.5 M8:5	M5:3.5 M8:5
Operating torque	Typical for 3-pole switch fuses		Nm	5	5	5	7	7	7

Placing options of the operating mechanism

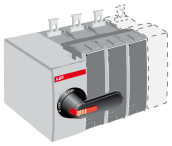

At the end of the switch fuse OS_03 or 04

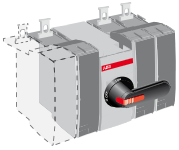

Between the poles OS_12 or 22

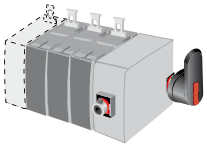

Side operated types OS_30 or 40

[*] Utilization category B
[1] Ambient temperature 60 °C: derating 20%.
[2] Acc. to IEC 60947-1, § 6.1.1.
[3] Max. fuse body diam. 32 mm.
[4] Some fuse links limit these figures further. Starting current characteristics must be considered separately.
[5] The capacitor rating of the switch-fuse is limited by the fuse link.

The technical data is valid at the time of printing.
We reserve the right to subsequent alterations.

Switch fuses OS32G...160G_, DIN-types
Ordering information

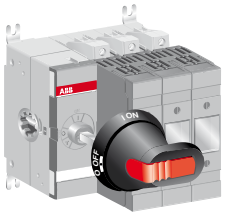

A04172

OS32G_...63G_03P

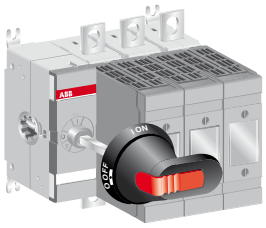

A04173

OS125G_...160G_03P

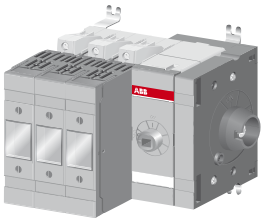
S07014

OS32G_...63GDS30

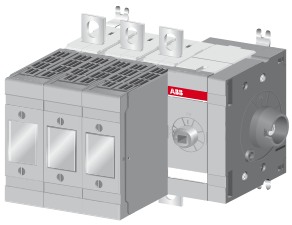
S07015

OS125G_...160GDS30

Front operated switch fuses

Including a black ON-OFF plastic handle and shaft as standard. OS32G_...63G_ include protected tunnel terminals (IP20) and OS125G...160G include a terminal bolt kit. The handle is IP65 protected, padlockable in the OFF-position and with door interlock in the ON-position and when padlocked. The shaft is adjustable for a range of installation depths.

Rated op. current AC-20...23 ≤ 690V [A]	Rated op. power AC-23 400/500/690V [kW]	Fuse size	Number of poles	Type	Order number	Units/ type [pcs]	Weight/ unit [kg]
Mechanism between the poles							
32	15/18.5/22	000	3	OS32GD12P	1SCA114581R1001	1	1.3
32	15/18.5/22	000	4	OS32GD22N2P	1SCA115202R1001	1	1.6
63	30/37/55	000	3	OS63GD12P	1SCA115227R1001	1	1.3
63	30/37/55	000	4	OS63GD22N2P	1SCA115230R1001	1	1.6
125	55/75/110	000, 00	3	OS125GD12P	1SCA115641R1001	1	1.5
125	55/75/110	000, 00	4	OS125GD22N2P	1SCA115880R1001	1	1.8
160	75/90/132	000, 00	3	OS160GD12P	1SCA115643R1001	1	1.5
160	75/90/132	000, 00	4	OS160GD22N2P	1SCA115884R1001	1	1.8
Mechanism at the end of the switch fuse							
32	15/18.5/22	000	3	OS32GD03P	1SCA115189R1001	1	1.3
32	15/18.5/22	000	4	OS32GD04N2P	1SCA115193R1001	1	1.6
63	30/37/55	000	3	OS63GD03P	1SCA115207R1001	1	1.3
63	30/37/55	000	4	OS63GD04N2P	1SCA115209R1001	1	1.6
125	55/75/110	000, 00	3	OS125GD03P	1SCA115639R1001	1	1.5
125	55/75/110	000, 00	4	OS125GD04N2P	1SCA115877R1001	1	1.8
160	75/90/132	000, 00	3	OS160GD03P	1SCA115399R1001	1	1.5
160	75/90/132	000, 00	4	OS160GD04N2P	1SCA115882R1001	1	1.8

Side operated switch fuses without handle and shaft

OS32G_...63G_ include protected tunnel terminals (IP20) and OS125G...160G include a terminal bolt kit.

Rated op. current AC-20...23 ≤ 690V [A]	Rated op. power AC-23 400/500/690V [kW]	Fuse size	Number of poles	Type	Order number	Units/ type [pcs]	Weight/ unit [kg]
32	15/18.5/22	000	3	OS32GDS30	1SCA115963R1001	1	1.3
32	15/18.5/22	000	4	OS32GDS40N2	1SCA116046R1001	1	1.6
63	30/37/55	000	3	OS63GDS30	1SCA116007R1001	1	1.3
63	30/37/55	000	4	OS63GDS40N2	1SCA116047R1001	1	1.6
125	55/75/110	000, 00	3	OS125GDS30	1SCA115966R1001	1	1.5
125	55/75/110	000, 00	4	OS125GDS40N2	1SCA115967R1001	1	1.8
160	75/90/132	000, 00	3	OS160GDS30	1SCA115968R1001	1	1.5
160	75/90/132	000, 00	4	OS160GDS40N2	1SCA115969R1001	1	1.8

Shafts and handles included as standard / Front operated switch fuses

Suitable for switches	Included shaft	Included handle	Included terminal bolts
OS32G_...63G_	OXP6X161	OHB45J6	
OS125G_...160G_	OXP6X161	OHB65J6	M8x25

OS_N2_ = Non-fused neutral on the right side

Switch fuses OS32G...160G_, BS-types
Ordering information

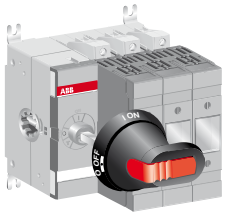

A04172

OS32G_...63G_03P

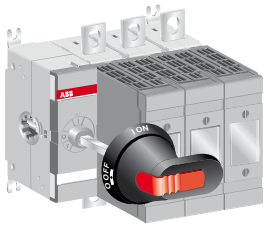

A04173

OS100G_...160G_03P

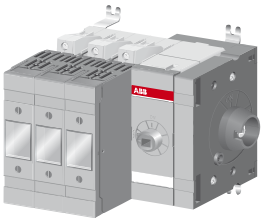
S07014

OS32G_...63GBS30

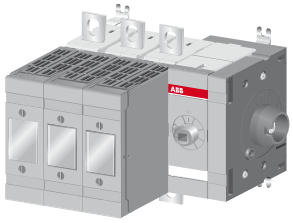
S07015

OS100G_...160GBS30

Front operated switch fuses

Including a black ON-OFF plastic handle and shaft as standard. OS32G_...63G_ include protected tunnel terminals (IP20) and OS100G...160G include a terminal bolt kit. The handle is IP65 protected, padlockable in the OFF-position and with door interlock in the ON-position and when padlocked. The shaft is adjustable for a range of installation depths.

Rated op. current AC-20...23 ≤ 690V [A]	Rated op. power AC-23 400/500/690V [kW]	Fuse size	Number of poles	Type	Order number	Units/ type [pcs]	Weight/ unit [kg]
Mechanism between the poles							
32	15/18.5/22	A2, A3	3	OS32GB12P	1SCA115331R1001	1	1.3
32	15/18.5/22	A2, A3	4	OS32GB22N1P	1SCA115345R1001	1	1.6
63	30/37/55	A2, A3	3	OS63GB12P	1SCA115325R1001	1	1.3
63	30/37/55	A2, A3	4	OS63GB22N1P	1SCA114601R1001	1	1.6
100	55/55/90	A2, A3, A4[1)]	3	OS100GB12P	1SCA114586R1001	1	1.5
100	55/55/90	A2, A3, A4[1)]	4	OS100GB22N1P	1SCA114602R1001	1	1.8
125	55/75/110	A2, A3, A4[1)]	3	OS125GB12P	1SCA114603R1001	1	1.5
125	55/75/110	A2, A3, A4[1)]	4	OS125GB22N1P	1SCA115903R1001	1	1.8
160	75/90/132	A2, A3, A4[1)]	3	OS160GB12P	1SCA115637R1001	1	1.5
160	75/90/132	A2, A3, A4[1)]	4	OS160GB22N1P	1SCA115899R1001	1	1.8
Mechanism at the end of the switch fuse							
32	15/18.5/22	A2, A3	3	OS32GB03P	1SCA115259R1001	1	1.3
32	15/18.5/22	A2, A3	4	OS32GB04N1P	1SCA114610R1001	1	1.6
63	30/37/55	A2, A3	3	OS63GB03P	1SCA115235R1001	1	1.3
63	30/37/55	A2, A3	4	OS63GB04N1P	1SCA115238R1001	1	1.6
100	55/55/90	A2, A3, A4[1)]	3	OS100GB03P	1SCA114613R1001	1	1.5
100	55/55/90	A2, A3, A4[1)]	4	OS100GB04N1P	1SCA114614R1001	1	1.8
125	55/75/110	A2, A3, A4[1)]	3	OS125GB03P	1SCA115634R1001	1	1.5
125	55/75/110	A2, A3, A4[1)]	4	OS125GB04N1P	1SCA115901R1001	1	1.8
160	75/90/132	A2, A3, A4[1)]	3	OS160GB03P	1SCA115413R1001	1	1.5
160	75/90/132	A2, A3, A4[1)]	4	OS160GB04N1P	1SCA115896R1001	1	1.8

Side operated switch fuses without handle and shaft

OS32G_...63G_ include protected tunnel terminals (IP20) and OS100G...160G include a terminal bolt kit.

Rated op. current AC-20...23 ≤ 690V [A]	Rated op. power AC-23 400/500/690V [kW]	Fuse size	Number of poles	Type	Order number	Units/ type [pcs]	Weight/ unit [kg]
32	15/18.5/22	A2, A3	3	OS32GBS30	1SCA115955R1001	1	1.3
32	15/18.5/22	A2, A3	4	OS32GBS40N1	1SCA115956R1001	1	1.6
63	30/37/55	A2, A3	3	OS63GBS30	1SCA115957R1001	1	1.3
63	30/37/55	A2, A3	4	OS63GBS40N1	1SCA115978R1001	1	1.6
100	55/55/90	A2, A3, A4[1)]	3	OS100GBS30	1SCA116758R1001	1	1.5
100	55/55/90	A2, A3, A4[1)]	4	OS100GBS40N1	1SCA116759R1001	1	1.8
100	55/55/90	A2, A3, A4[1)]	4	OS100GBS40N2	1SCA116760R1001	1	1.8
125	55/75/110	A2, A3, A4[1)]	3	OS125GBS30	1SCA116048R1001	1	1.5
125	55/75/110	A2, A3, A4[1)]	4	OS125GBS40N1	1SCA115959R1001	1	1.8
160	75/90/132	A2, A3, A4[1)]	3	OS160GBS30	1SCA115960R1001	1	1.5
160	75/90/132	A2, A3, A4[1)]	4	OS160GBS40N1	1SCA115961R1001	1	1.8

Shafts and handles included as standard / Front operated switch fuses

Suitable for switches	Included shaft	Included handle	Included terminal bolts
OS32G_...63G_	OXP6X161	OHB45J6	
OS100G_...160G_	OXP6X161	OHB65J6	M8x25

1) Max. fuse diameter 32 mm
OS_N1_ = Non-fused neutral on the left side
OS_N2_ = Non-fused neutral on the right side

Switch fuses OS32G...160G_, NFC-types
Ordering information

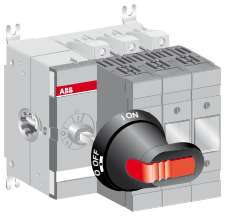

OS50G_03P

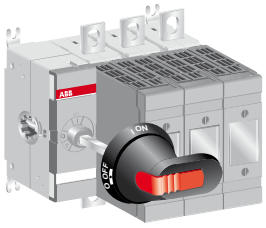

OS125G_03P

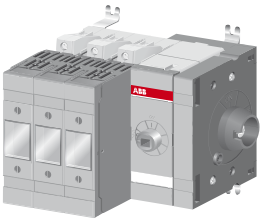

OS50GFS30

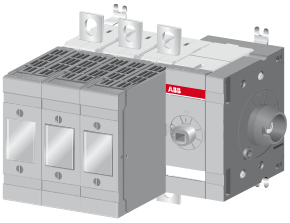

OS125GFS30

Front operated switch fuses

Including a black ON-OFF plastic handle and shaft as standard. OS50G_ include protected tunnel terminals (IP20) and OS125G include a terminal bolt kit. The handle is IP65 protected, padlockable in the OFF-position and with door interlock in the ON-position and when padlocked. The shaft is adjustable for a range of installation depths.

Rated op. current AC-20...23 ≤ 690V [A]	Rated op. power AC-23 400/500/690V [kW]	Fuse size	Number of poles	Type	Order number	Units/ type [pcs]	Weight/ unit [kg]
Mechanism between the poles							
50	22/30/37	14x51	3	OS50GF12P	1SCA115553R1001	1	1.3
50	22/30/37	14x51	4	OS50GF22N1P	1SCA114622R1001	1	1.6
50	22/30/37	14x51	4	OS50GF22FP	1SCA114623R1001	1	1.6
125	55/75/110	22x58	3	OS125GF12P	1SCA114624R1001	1	1.5
125	55/75/110	22x58	4	OS125GF22N1P	1SCA115893R1001	1	1.8
125	55/75/110	22x58	4	OS125GF22FP	1SCA115614R1001	1	1.8
Mechanism at the end of the switch fuse							
50	22/30/37	14x51	3	OS50GF03P	1SCA115492R1001	1	1.3
50	22/30/37	14x51	4	OS50GF04N1P	1SCA115495R1001	1	1.6
50	22/30/37	14x51	4	OS50GF04FP	1SCA115498R1001	1	1.6
125	55/75/110	22x58	3	OS125GF03P	1SCA115602R1001	1	1.5
125	55/75/110	22x58	4	OS125GF04N1P	1SCA115888R1001	1	1.8
125	55/75/110	22x58	4	OS125GF04FP	1SCA115606R1001	1	1.8

Side operated switch fuses without handle and shaft

OS50G_ include protected tunnel terminals (IP20) and OS125G include a terminal bolt kit.

Rated op. current AC-20...23 ≤ 690V [A]	Rated op. power AC-23 400/500/690V [kW]	Fuse size	Number of poles	Type	Order number	Units/ type [pcs]	Weight/ unit [kg]
50	22/30/37	14x51	3	OS50GFS30	1SCA116050R1001	1	1.3
50	22/30/37	14x51	4	OS50GFS40N1	1SCA116058R1001	1	1.6
50	22/30/37	14x51	4	OS50GFS40F	1SCA116014R1001	1	1.6
125	55/75/110	22x58	3	OS125GFS30	1SCA115973R1001	1	1.5
125	55/75/110	22x58	4	OS125GFS40N1	1SCA115974R1001	1	1.8
125	55/75/110	22x58	4	OS125GFS40F	1SCA115975R1001	1	1.8

Shafts and handles included as standard / Front operated switch fuses

Suitable for switches	Included shaft	Included handle	Included terminal bolts
OS50G_	OXP6X161	OHB45J6	
OS125G_	OXP6X161	OHB65J6	M8x25

OS_N1_ = Non-fused neutral on the left side
OS_F_ = Fused neutral

Switch fuses OS32G...160G_, UL-types
Ordering information

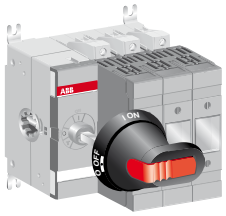

OS60G_03P

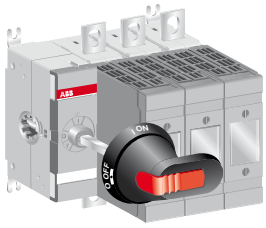

OS100G_03P

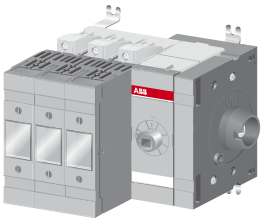

OS60GJS30

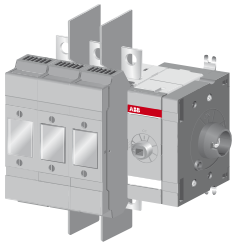

OS100GJS30

Front operated switch fuses

Including a black ON-OFF plastic handle and shaft as standard. OS60G_ include protected tunnel terminals (IP20) and OS100G_include a terminal bolt kit. The handle is IP65 protected, Nema type 1, 3R, 12, padlockable in the OFF-position and with door interlock in the ON-position and when padlocked. The shaft is adjustable for a range of installation depths.

Ampere rating [A]	Horse power ratings 3-phase 240/480/600V [HP]	Fuse size	Number of poles	Type	Order number	Units/ type [pcs]	Weight/ unit [kg]
Mechanism between the poles							
60	15/30/50	J, 60A	3	OS60GJ12P	1SCA115449R1001	1	1.3
60	15/30/50	J, 60A	4	OS60GJ22FP	1SCA115469R1001	1	1.6
100	30/60/75	J, 100A	3	OS100GJ12P	1SCA115666R1001	1	1.5
100	30/60/75	J, 100A	4	OS100GJ22FP	1SCA114636R1001	1	1.8
Mechanism at the end of the switch fuse							
60	15/30/50	J, 60A	3	OS60GJ03P	1SCA115443R1001	1	1.3
60	15/30/50	J, 60A	4	OS60GJ04FP	1SCA115446R1001	1	1.6
100	30/60/75	J, 100A	3	OS100GJ03P	1SCA114639R1001	1	1.5
100	30/60/75	J, 100A	4	OS100GJ04FP	1SCA115439R1001	1	1.8

Side operated switch fuses without handle and shaft

OS60G_ include protected tunnel terminals (IP20) and OS100G include a terminal bolt kit.

Ampere rating [A]	Horse power ratings 3-phase 240/480/600V [HP]	Fuse size	Number of poles	Type	Order number	Units/ type [pcs]	Weight/ unit [kg]
60	15/30/50	J, 60A	3	OS60GJS30	1SCA116051R1001	1	1.3
60	15/30/50	J, 60A	4	OS60GJS40F	1SCA115970R1001	1	1.6
100	30/60/75	J, 100A	3	OS100GJS30	1SCA115971R1001	1	1.5
100	30/60/75	J, 100A	4	OS100GJS40F	1SCA115972R1001	1	1.8

Shafts and handles included as standard / Front operated switch fuses

Suitable for switches	Included shaft	Included handle	Included terminal bolts
OS60G_	OXP6X161	OHB45J6	
OS100G_	OXP6X161	OHB65J6	M8x25

Accessories
Ordering information





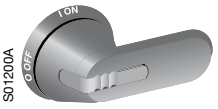

OH_65J_

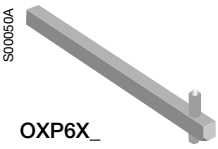

OXP6X_

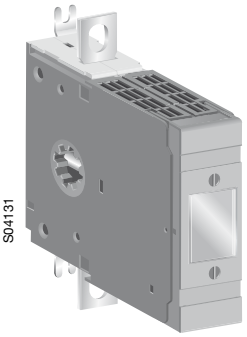

OSP_

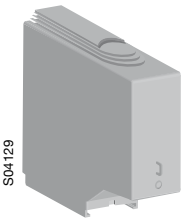

OSS_L

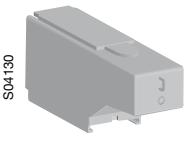

OSS_S

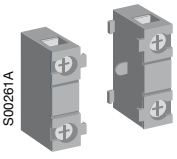

OA_G

Optional handles, IP 65

For front operated switch fuses

Padlockable with 3 padlocks in the OFF-position, door interlock in the ON-position. Units/type = 1 pcs. Screw fixing from the back side of the handle, no screws on the front, ensures double insulation.

Colour	Handle length [mm]	Type	Order number	Delivery batch [pcs]	Weight /unit [kg]
For shaft diameter 6 mm					
Plastic handles, black and red-yellow: I-O/ON-OFF, grey: I-O.					
Black	45	OHB45J6	1SCA022380R8770	100	0.12
Red-Yellow	45	OHY45J6	1SCA022380R8930	100	0.12
Black	65	OHB65J6	1SCA022380R9660	100	0.12
Red-Yellow	65	OHY65J6	1SCA022380R9820	100	0.12
Grey	65	OHG65J6	1SCA022380R9740	100	0.12
Plastic handles, black and red-yellow: Test/I-O/ON-OFF, grey: Test/I-O.					
Black	45	OHB45J6T	1SCA109870R1001	100	0.12
Black	65	OHB65J6T	1SCA022399R8110	100	0.12
Red-Yellow	65	OHY65J6T	1SCA022456R9540	100	0.12
Grey	65	OHG65J6T	1SCA022456R9620	100	0.12

Extended shafts

Units/type = 1 piece

Shaft length [mm]	Front operated H / [mm]	Side operated H / [mm]	Type	Order number	Delivery batch [pcs]	Weight /unit [kg]
For OS 32...63[2], shaft diameter 6 mm						
63		161...167	OXP6X63	1SCA111010R1001	10	0.02
90		188...194	OXP6X90	1SCA022064R1180	10	0.03
130	127...174[3]	228...234	OXP6X130	1SCA022057R0570	10	0.04
161	138...205		OXP6X161[1]	1SCA022067R1760	10	0.05
210	187...254		OXP6X210	1SCA022295R6080	10	0.06
290	267...334		OXP6X290	1SCA022042R6370	10	0.08
360	337...404		OXP6X360	1SCA022042R6530	10	0.10
430	407...474		OXP6X430	1SCA022056R6030	10	0.12
For OS 100...160[2], shaft diameter 6 mm						
63		196...202	OXP6X63	1SCA111010R1001	10	0.02
90		223...229	OXP6X90	1SCA022064R1180	10	0.03
130	137...174[4]	263...269	OXP6X130	1SCA022057R0570	10	0.04
161	138...205		OXP6X161[1]	1SCA022067R1760	10	0.05
210	187...254		OXP6X210	1SCA022295R6080	10	0.06
290	267...334		OXP6X290	1SCA022042R6370	10	0.08
360	337...404		OXP6X360	1SCA022042R6530	10	0.10
430	407...474		OXP6X430	1SCA022056R6030	10	0.12

Fourth poles

Snap-on mounting to the left or right side of the switch.

Suitable for 3-pole switches	Number of poles	Description	Type	Order number	Units/ type [pcs]	Weight [kg]
Fusible 4. poles						
OS125G_...160G_, DIN-type		Fusible	OSP160GD	1SCA114768R1001	1	0.40
OS125G_...160G_, BS-type		Fusible	OSP160GB	1SCA114769R1001	1	0.40
OS100G_...160G_, N-type		Switched	OSP160GN	1SCA114770R1001	1	0.40

Terminal shrouds

Pack of single pole terminal shrouds, snap-on mounting, grey plastic, IP 3X. Transparent shrouds available on request.

OS100G_...160G_	3	Long type	OSS160GG1L/3	1SCA114764R1001	3	0.10
OS100G_...160G_	3	Short type	OSS160GG1S/3	1SCA114766R1001	3	0.07
OS100G_...160G_	4	Long type	OSS160GG1L/4	1SCA114765R1001	4	0.12
OS100G_...160G_	4	Short type	OSS160GG1S/4	1SCA114767R1001	4	0.08

Auxiliary contacts

Protection degree IP20. Mounting under the mechanism cover, max. 4 contact blocks. All four contacts can be used as “Aux./Test”-contacts and 2 contacts can be used as “Test indication” contacs. Auxiliary contact blocks can be mounted also on the left side of the switch fuse with the OEA28 module, max. 8 contact blocks.

OS32G_...160G_	1NO	OA1G10	1SCA022353R4970	10	0.03
OS32G_...160G_	1NC	OA3G01	1SCA022456R7410	10	0.03

[1] Included as standard
[2] Side operated, 4-pole: OS 32...63: add 45 mm, OS 100...160: add 35 mm
[3] OS32...63GB/GF: 115...174
[4] OS100GJ: 113...174, OS100GB...160GB: 121...174

Switch fuses OS32G...160G_
Dimension drawings

OS32...63G_

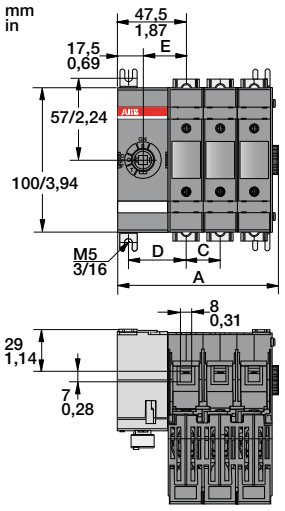

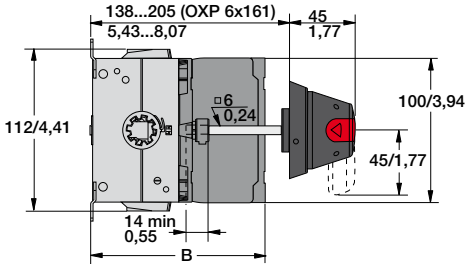

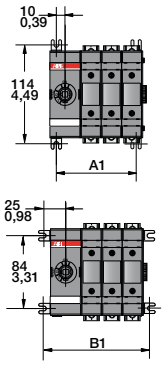

M00287/OS32-63G_01-04 A

	OS32-63GD				OS32-63GB/F				OS60GJ			
	mm				mm				mm / in			
	D01	D02	D03	D04	B/F01	B/F02	B/F03	B/F04	J01	J02	J03	J04
A	64,5	88	111,5	135,5	64,5	88	111,5	135,5	74,5/2,93	109,5/4,31	144,5/5,69	179,5/7,07
B	120,5	120,5	120,5	120,5	108,5	108,5	108,5	108,5	118/4,65	118/4,65	118/4,65	118/4,65
C	-	23,5	23,5	23,5	-	23,5	23,5	23,5	-	35/1,38	35/1,38	35/1,38
D	40	40	40	40	40	40	40	40	45,5/1,79	45,5/1,79	45,5/1,79	45,5/1,79
E	30	30	30	30	30	30	30	30	36/1,41	36/1,41	36/1,41	36/1,41
A1	45	68,5	92	111,5	45	68,5	92	111,5	51/2,01	86/3,39	121/4,76	156/6,14
B1	75	98,5	122	145,5	75	98,5	122	145,5	81/3,19	116/4,57	151/5,94	186/7,32

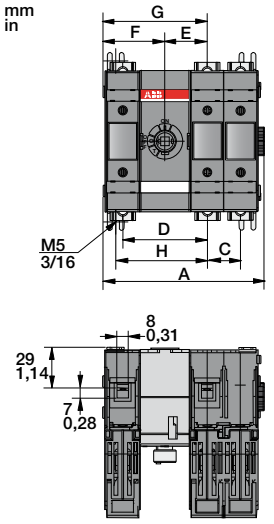

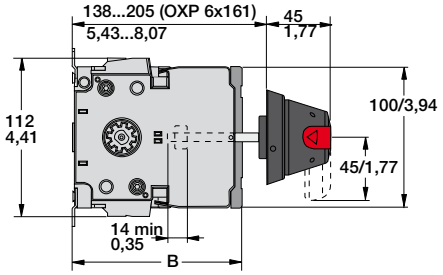

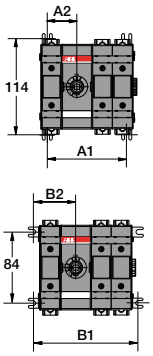

M00288/OS32-63G_11-22 A

	OS32-63GD				OS32-63GB/F				OS60GJ			
	mm				mm				mm / in			
	D11	D12	D13	D22	B/F11	B/F12	B/F13	B/F22	J11	J112	J13	J22
A	91	114,5	138	138	91	114,5	138	138	74,5/2,93	148/5,82	183,5/7,20	179,5/8,58
B	120,5	120,5	120,5	120,5	108,5	108,5	108,5	108,5	118/4,65	118/4,65	118/4,65	118/4,65
C	-	23,5	23,5	23,5	-	23,5	23,5	23,5	-	35/1,38	35/1,38	35/1,38
D	60	60	60	60	60	60	60	60	71,5/2,81	71,5/2,81	71,5/2,81	71,5/2,81
E	30	30	30	30	30	30	30	30	36/1,41	36/1,41	36/1,41	36/1,41
F	44	44	44	67,5	44	44	44	67,5	55,5/2,19	55,5/2,19	55,5/2,19	90,5/3,56
G	74	74	74	97,5	74	74	74	97,5	91,5/3,6	91,5/3,6	91,5/3,6	126,5/4,98
A1	70	93,5	117	117	70	93,5	117	117	81,5/3,21	116,5/4,59	151,5/5,96	151,5/5,96
A2	35	35	35	58,5	35	35	35	58,5	40,5/1,59	40,5/1,59	40,5/1,59	75,5/2,97
B1	75	123,5	147	147	75	123,5	147	147	111,5/4,39	146,5/5,77	181,5/7,15	181,5/7,15
B2	50	50	50	73,5	50	50	50	73,5	70,5/2,78	70,5/2,78	70,5/2,78	105,5/4,15

OS32...63G_S

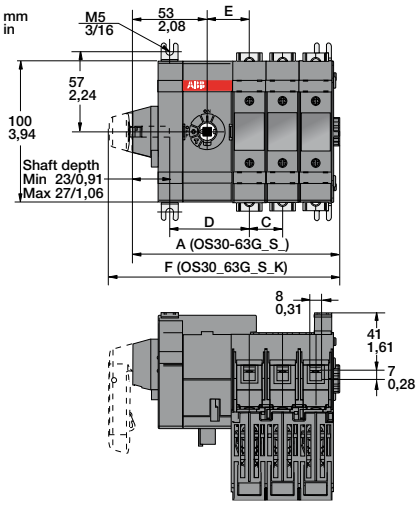

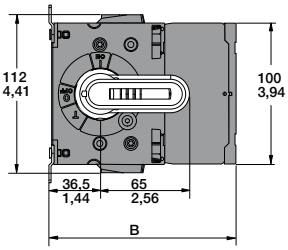

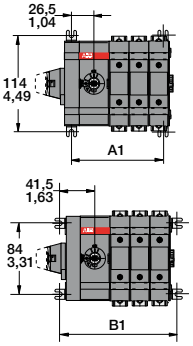

M00296/OS30_63G_01_04S A

	OS32-63G_ mm								OS60G_ mm/ in			
	DS01	DS02	DS03	DS04	B/FS01	B/FS02	B/FS03	B/FS04	JS01	JS02	JS03	JS04
A	99,5	123	146,5	170	99,5	123	146,5	170	109,5/4,31	144,5/5,69	179,5/7,07	214,5/8,44
B	132,5	132,5	132,5	132,5	120,5	120,5	120,5	120,5	130/5,12	130/5,12	130/5,12	130/5,12
C	-	23,5	23,5	23,5	-	23,5	23,5	23,5	-	35/1,38	35/1,38	35/1,38
D	56,5	56,5	56,5	56,5	56,5	56,5	56,5	56,5	62/2,44	62/2,44	62/2,44	62/2,44
E	30	30	30	30	30	30	30	30	36/1,41	36/1,41	36/1,41	36/1,41
F	116,5	140	163,5	187	116,5	140	163,5	187	126,5/4,98	161,5/6,36	196,5/7,74	231,5/9,11
A1	61,5	85	108,5	132	61,5	85	108,5	132	67,5/2,66	102,5/4,04	137,5/5,41	172,5/6,79
B1	91,5	115	138,5	162,5	91,5	115	138,5	162,5	37,5/1,48	72,5/2,85	107,5/4,23	142,5/5,61

Switch fuses OS32G...160G_
Dimension drawings

OS100...160G_

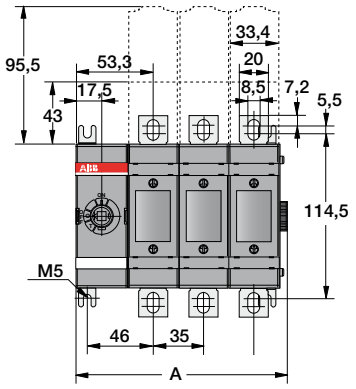

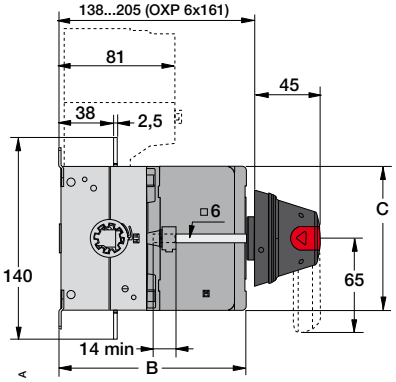

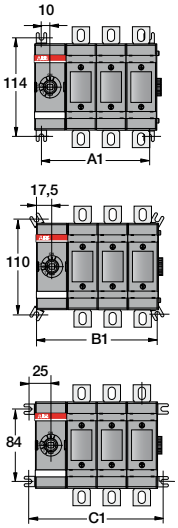

M00289/OS100-160G_01-04 A

	OS100-160GD/F mm				OS100-160GB mm			
	D/F01	D/F02	D/F03	D/F04	B01	B02	B03	B04
A	76,5	111,5	146,5	181,5	76,5	111,5	146,5	181,5
B	130	130	130	130	114,5	114,5	114,5	114,5
C	100	100	100	100	118	118	118	118
A1	55	90	125	160	55	90	125	160
B1	70	105	140	175	70	105	140	175
C1	85	120	155	190	85	120	155	190

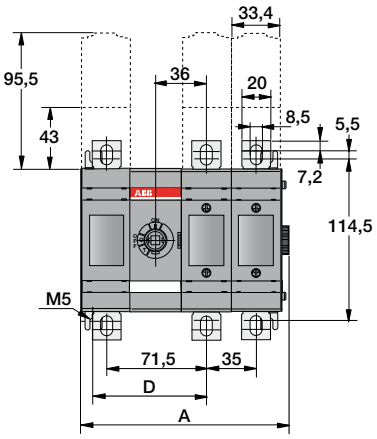

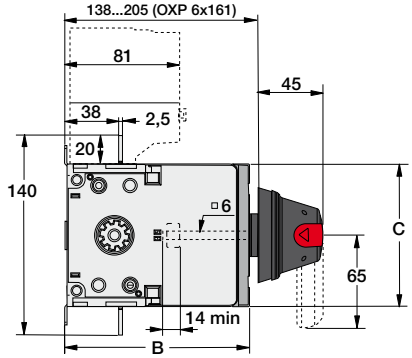

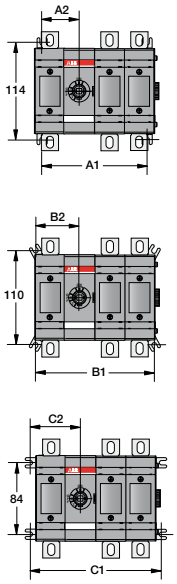

M00290/OS100-160G_11-22 A

	OS100-160GD/F mm				OS100-160GB mm			
	D/F11	D/F12	D/F13	D/F22	B11	B12	B13	B22
A	113	148	183	183	113	148	183	183
B	130	130	130	130	114,5	114,5	114,5	114,5
C	100	100	100	100	118	118	118	118
D	81	81	81	116	81	81	81	116
A1	90	125	160	160	90	125	160	160
A2	45	45	45	80	45	45	45	80
B1	105	140	175	175	105	140	175	175
B2	52,5	52,5	52,5	87,5	52,5	52,5	52,5	87,5
C1	120	155	190	190	120	155	190	190
C2	60	60	60	95	60	60	60	95

OS100...160G_S

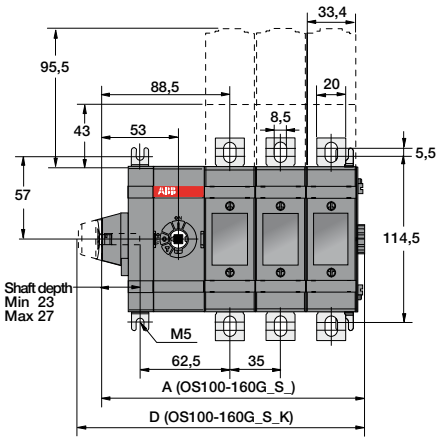

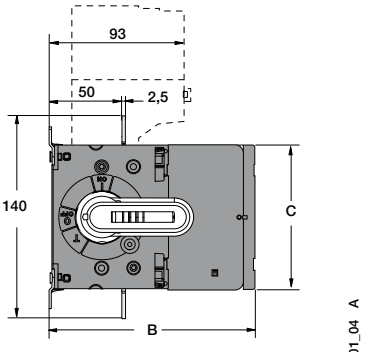

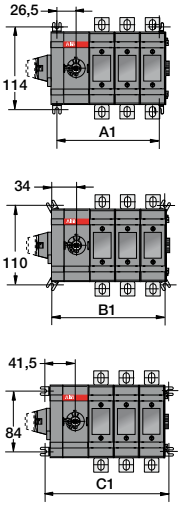

M00298/OS100_160G_S01_04 A

	OS100-160G mm							
	D/F01	D/F02	D/F03	D/F04	B01	B02	B03	B04
A	111,5	146,5	181,5	216,5	111,5	146,5	181,5	216,5
B	142	142	142	142	126,5	126,5	126,5	126,5
C	100	100	100	100	118	118	118	118
D	128,5	163,5	198,5	233,5	128,5	163,5	198,5	233,5
A1	71,5	106,5	141,5	176,5	71,5	106,5	141,5	176,5
B1	86,5	121,5	156,5	191,5	86,5	121,5	156,5	191,5
C1	101,5	136,5	171,5	206,5	101,5	136,5	171,5	206,5

Switch fuses OS32G...160G_
Dimension drawings

OS100GJ_

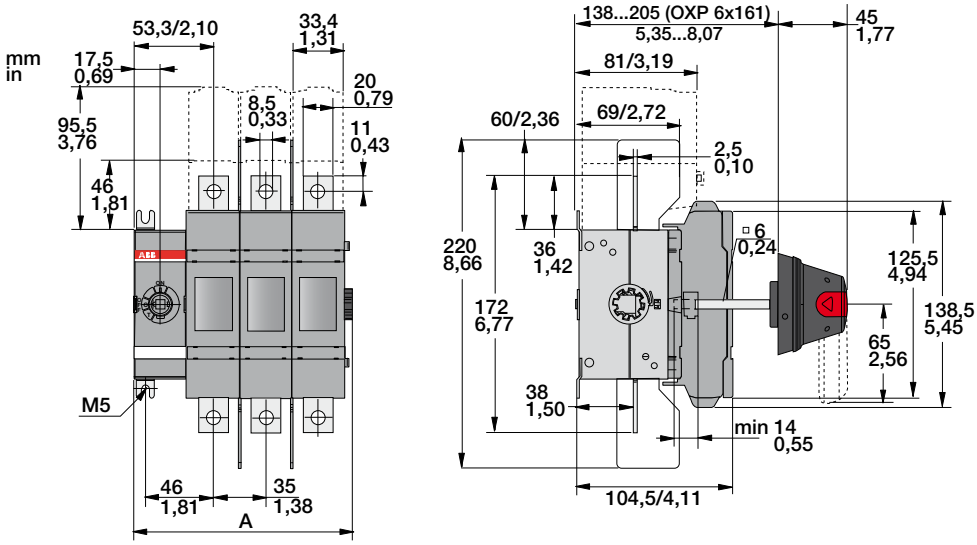

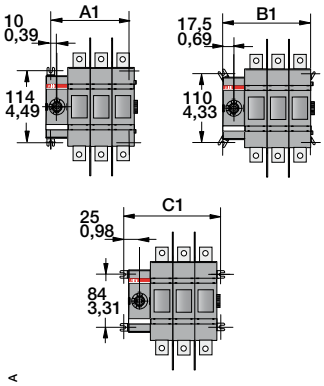

M00291/OS100GJ01-04 A

	OS100GJ			
	mm / in	mm / in	mm / in	mm / in
	J01	J02	J03	J04
A	76,5/3,01	111,5/4,39	146,5/5,77	181,5/7,15
A1	55/2,17	90/3,54	125/4,92	160/6,30
B1	70/2,76	105/4,13	140/5,51	175/6,89
C1	85/3,35	120/4,72	155/6,10	190/7,48

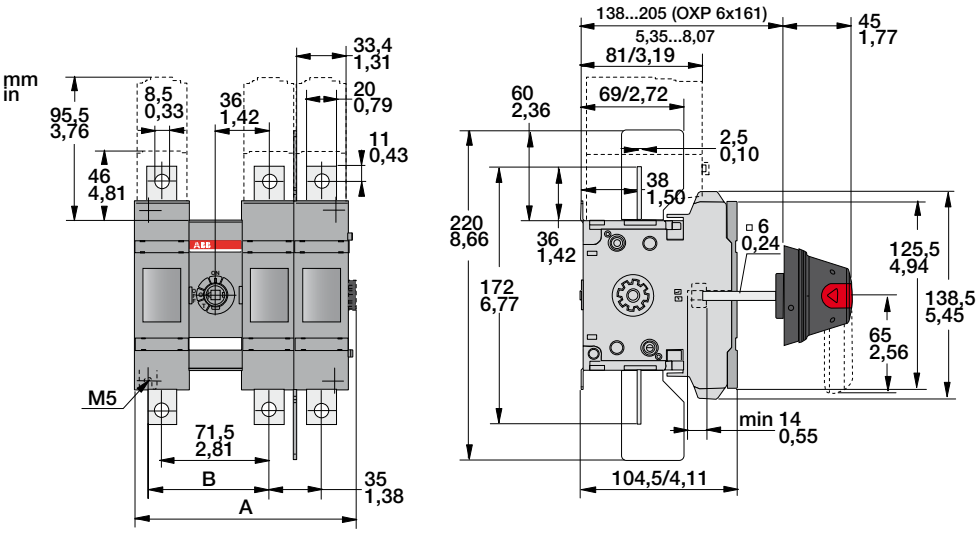

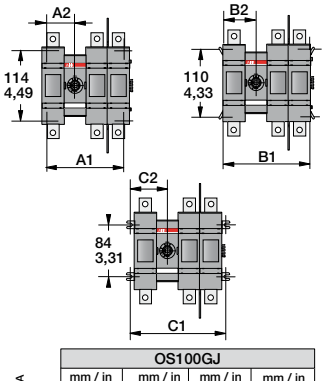

M00292/OS100GJ11-22 A

	OS100GJ			
	mm / in	mm / in	mm / in	mm / in
	J11	J12	J13	J22
A	113/4,45	148/5,83	183/7,20	183/7,20
B	81/3,19	81/3,19	81/3,19	116/4,57
A1	90/3,54	125/4,92	160/6,30	160/3,15
A2	45/1,77	45/1,77	45/1,77	80/3,15
B1	105/4,13	140/5,51	175/6,89	175/6,89
B2	52,5/2,07	52,5/2,07	52,5/2,07	160/3,44
C1	120/4,72	155/6,10	190/7,48	190/7,48
C2	60/2,36	60/2,36	60/2,36	95/3,74

The measurements in the dimension drawings are preliminary and may be altered.

OS100GJ_S

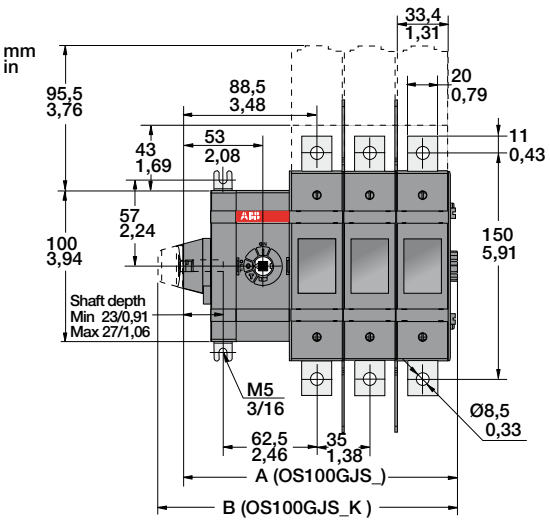

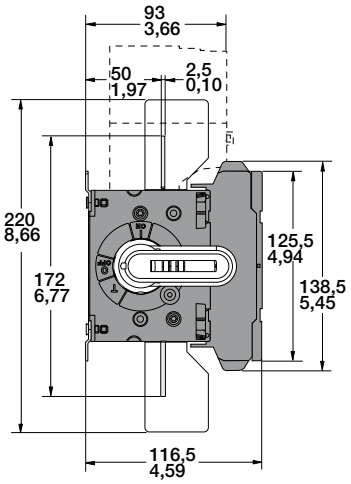

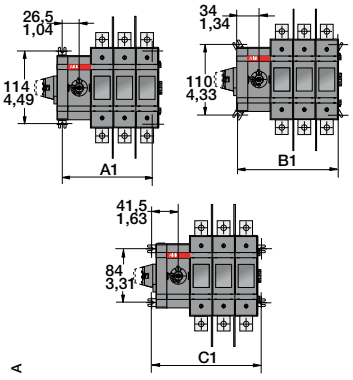

M00297/OS100GJS A

	OS100G_ mm/ in			
	JS01	JS02	JS03	JS04
A	111,5/4,39	146,5/5,77	181,5/7,15	216,5/8,52
B	128,5/5,06	163,5/6,44	198,5/7,91	233,5/9,19
A1	71,5/2,81	106,5/4,19	141,5/5,57	176,5/6,95
B1	86,5/3,41	121,5/4,78	156,5/6,16	191,5/7,54
C1	101,5/4,00	136,5/5,37	171,5/6,75	206,5/8,13

Contact us

ABB Oy
Low Voltage Switches
P.O. Box 622
FI-65101 Vaasa, Finland
Phone: +358 10 22 11
Fax: +358 22 45708
E-Mail: firstname.surname@fi.abb.com

www.abb.com

The technical data and dimensions are valid at the time of printing. We reserve the right to subsequent alterations.

Producted by A&V Insinöörit Oy / Tekninen viestintä, Vaasa, Finland
Catalogue OS10GB 10-03, 1SCC311005B0201

Power and productivity
for a better world™