POWER ROCKER SWITCH

CR Series

Features

- Rugged design with current switching up to 20 amps
- 2-color molded button available for maximum visibility
- Lighted and non-lighted versions
- Splash-proof option available
- Available in a wide variety of colors
- Fits to 3 panel cut-out widths
- Mechanical life: min. 100,000 operations

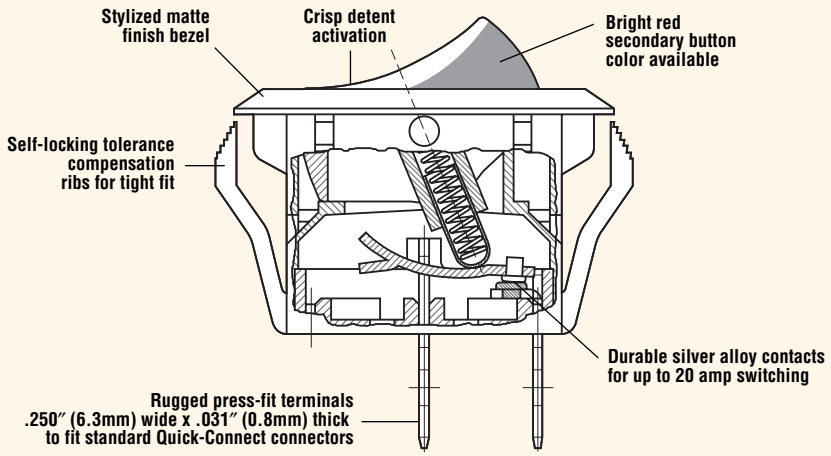

Electrical Ratings

Switch Series	EN61058 Rating	UL1054 Rating	Electrical Life at Rated Load According to VDE (Min. Operations)	Electrical Life at Rated Load According to UL (Min. Operations)
CR	16(4)A, 250V~, T125	20A, 125VAC; 16A, 250VAC; 3/4HP, 250VAC	10,000	6,000



Specifications

Electrical

Dielectric Strength:	1000VAC for 1 minute
Insulation Resistance:	10^8 ohms min at 500VDC
Initial Contact Resistance:	0.020 ohms max
Temperature Range:	-20°C to +85°C

Materials

Actuator (non-lighted):	Nylon 66 94V-2
Actuator (lighted):	Polycarbonate
Housing:	Nylon 66 94V-2
Case:	Nylon 66 94V-2
Spring:	Steel Wire
Contacts:	Silver Alloy
Movable Arm:	Silver-Plated Copper Alloy
Terminals:	Tin-Plated Copper Alloy

Dimensions inches (mm)

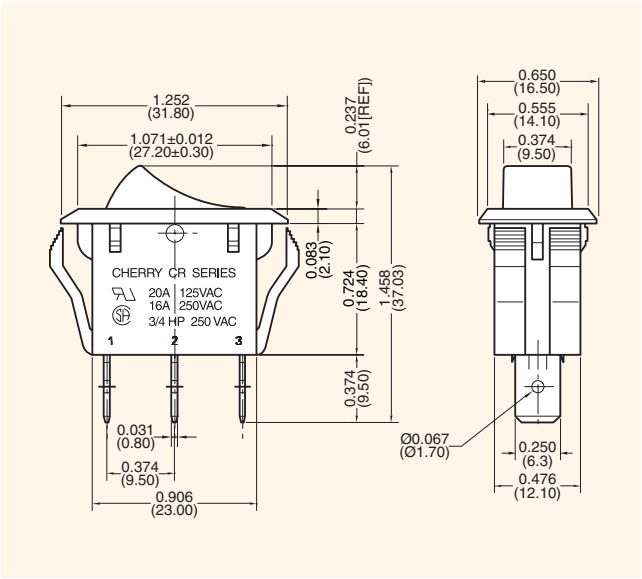

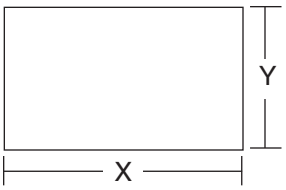

Z = Panel Thickness

Recommended Panel Cut-Out Dimensions

inches (mm)

	SUFFIX E		SUFFIX F		SUFFIX G or W	
Dim. Z	Dim. X	Dim. Y	Dim. X	Dim. Y	Dim. X	Dim. Y
0.030 to 0.049 (0.75 to 1.25)	1.120 (28.49)	0.476 (12.10)	1.120 (28.49)	0.528 (13.41)	1.120 (28.49)	0.543 (13.80)
0.049 to 0.079 (1.25 to 2.00)	1.130 (28.70)	0.476 (12.10)	1.130 (28.70)	0.528 (13.41)	1.130 (28.70)	0.543 (13.80)
0.079 to 0.118 (2.00 to 3.00)	1.150 (29.21)	0.476 (12.10)	1.150 (29.21)	0.528 (13.41)	1.150 (29.21)	0.543 (13.80)

Examples of Common Part Numbers and Descriptions inches (mm)

Part Number	Circuitry	Switch Function	Terminal Type	Actuator/ Housing Color	Legend Marking
CRE22F2FBBNE		On – Off	0.250 (6.3) Quick-Connect	Black/Black	
CRE22F4BBBNE		On – Off	0.250 (6.3) Quick-Connect	Red-Black/Black	
CRE24F2HBBNE		On – Off – On	0.250 (6.3) Quick-Connect	Black/Black	
CRE22F2BBRLE	1 2 3	On – Off/Lighted	0.250 (6.3) Quick-Connect	Red/Black	
CRE22F4BBBNW		On – Off	0.250 (6.3) Quick-Connect	Red-Black/Black Splash-Proof	

Ordering Information

CR **E** **2** **2** **F** **2** **F** **B** **B** **N** **E**

Series

Code	Contact Rating
E	20A, 125VAC; 16A, 250VAC (UL & CSA) 3/4HP, 250VAC (UL) 16(4)A, 250VAC~, T125 (VDE)

Code	Circuitry
2	Single-Pole

Code	Switch Function
2	On – Off
3	On – On
4	On – Off – On

Code	Terminal Type inches (mm)
F	0.250 (6.3) QC
T	0.250 (6.3) Solder Tag

Code	Actuator Type
2	Curve – One Color
4	Curve – Two Color Red Mold
6	Curve – Two Color Green Mold

Code	Actuator Marking
B	Blank
D	OFF ON
E	O I
F	O —
K	OFF ON
H	I O II
P	OFF ON

Code	Housing Color
E	Charcoal Grey
Y	Grey
B	Black
R	Red
W	White
C	Brown

Code	Actuator Color
Y	Grey
B	Black
G	Green
R	Red
A	Amber
W	White
S	Translucent Red
C	Brown
E	Charcoal Grey

Code	Lighted
N	Non-Lighted
L	Lighted (Bulb 125VAC)
E	Lighted (Bulb 250VAC)
F	Lighted 5VDC Incandescent
G	Lighted 6VDC Incandescent
H	Lighted 12VDC Incandescent

Code	Body Type inches (mm)
E	0.476 (12.10) Non-Washable
F	0.528 (13.41) Non-Washable
G	0.543 (13.79) Non-Washable
W	0.543 (13.79) Washable Conforms to IP42