New! 3600NF SERIES - SEALED TOGGLE SWITCHES FOR OUTSIDE APPLICATIONS

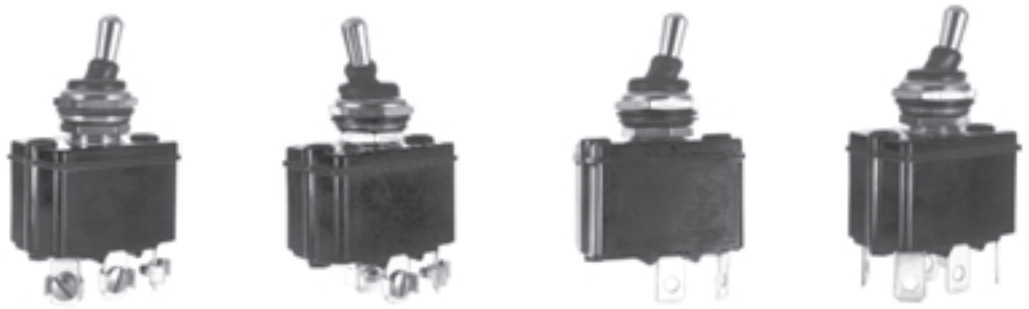

FEATURES

- **Multiple seals - 'o' ring between lever & bushing, mounted half length boot & nylon washer, case/covergasket, sealing washer and molded-in terminal inserts**
- **SPDT & DPDT panel mounting models with screw or solder lug/quick-connect terminals.**

SPECIFICATIONS

Contact ratings (resistive loads):	12A 28VDC, 6A 250VAC
Initial contact resistance:	10 milliohms maximum at 1 amp 2 VDC
Insulation resistance:	1000 megohms min. at 500 VDC
Dielectric strength:	2500 V rms min. - between terminals, 3000 V rms min - between terminals & metal frame
Electrical life (resistive):	10,000 cycles minimum at full load
Operating temperature range:	-40°C to +85°C
Torque:	1.50 Nm (1.10 ft. lb.) applied to nut
Panel thickness:	5 mm (.196") max.

MATERIALS

Contacts:	Silver
Actuator:	Nickel plated brass
Bushing:	Nickel plated brass
Case:	Phenolic
Hardware:	Supplied with 1/2 length sealing boot & nylon washer, 1 sealing washer & 1 nickel plated hex nut.

AGENCY RECOGNITION

Availability: consult factory for details of recognized models.

TERMINALS

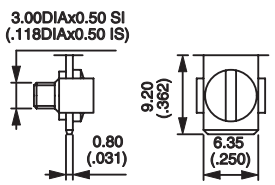

Screw

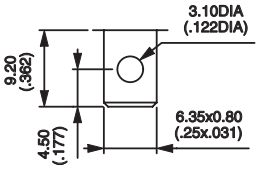

Sold. lug/Quick-connect

PANEL CUT-OUTS

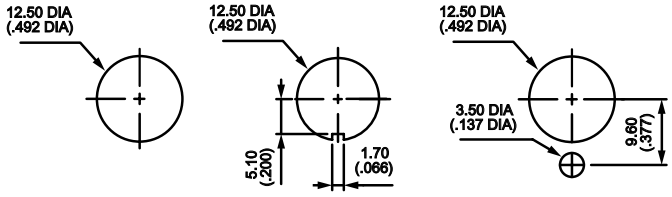

SPECIFICATIONS SUBJECT TO CHANGE WITHOUT NOTICE

New! 3600NF SERIES - SEALED TOGGLE SWITCHES FOR OUTSIDE APPLICATIONS

SPECIFICATIONS SUBJECT TO CHANGE WITHOUT NOTICE

Screw terminals - single pole



MOD. NO	CIRCUIT		
3631NF	ON	-	OFF
3635NF	MOM	-	ON
3636NF	ON	-	ON
3637NF	MOM	OFF	MOM
3638NF	ON	OFF	MOM
3639NF	ON	OFF	ON
Handle pos.			
(see dwg.) :	I	III	II
	2-1		2-3

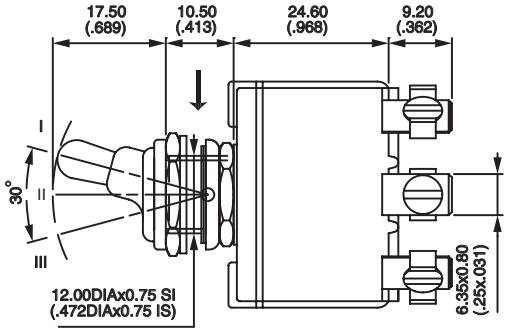

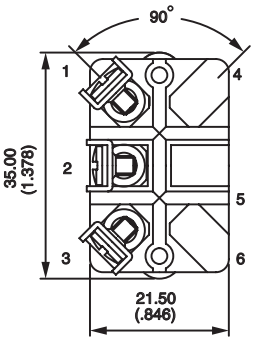

Screw terminals - double pole pole



MOD. NO	CIRCUIT		
3641NF	ON	-	OFF
3644NF*	ON	ON	ON
3645NF	MOM	-	ON
3646NF	ON	-	ON
3647NF	MOM	OFF	MOM
3648NF	ON	OFF	MOM
3649NF	ON	OFF	ON
Handle pos.			
(see dwg.) :	I	III	II
	2-1		2-3
	5-4		5-6

* Function 4: SP in DP case -
see specs. for 600H - 600 NH series.

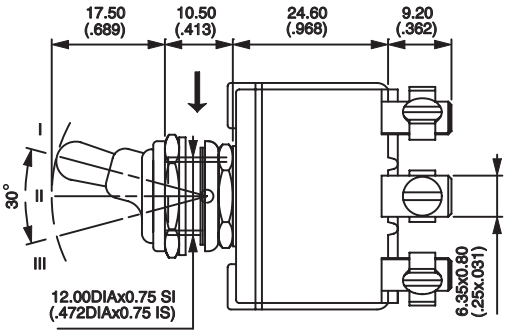

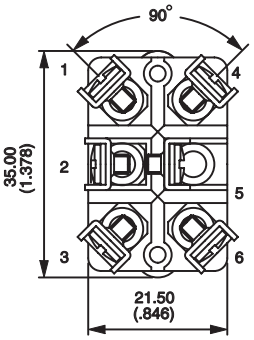

Solder lug/quick-connect terminals - single pole



MOD. NO	CIRCUIT		
3631NF/2	ON	-	OFF
3635NF/2	MOM	-	ON
3636NF/2	ON	-	ON
3637NF/2	MOM	OFF	MOM
3638NF/2	ON	OFF	MOM
3639NF/2	ON	OFF	ON
Handle pos.			
(see dwg.) :	I	III	II
	2-1		2-3

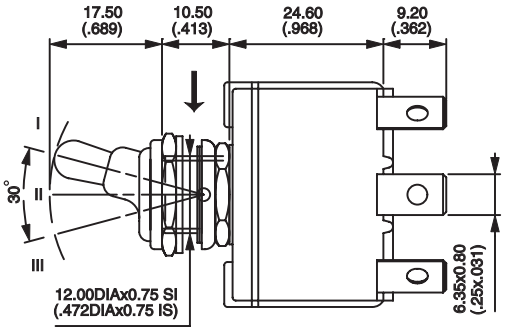

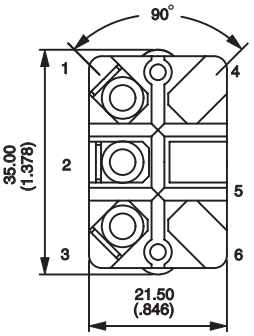

Solder lug/quick-connect terminals - double pole



MOD. NO	CIRCUIT		
3641NF/2	ON	-	OFF
3644NF/2*	ON	ON	ON
3645NF/2	MOM	-	ON
3646NF/2	ON	-	ON
3647NF/2	MOM	OFF	MOM
3648NF/2	ON	OFF	MOM
3649NF/2	ON	OFF	ON
Handle pos.			
(see dwg.) :	I	III	II
	2-1		2-3
	5-4		5-6

* Function 4: SP in DP case -
see specs. for 600H - 600 NH series.

