Model No.DCS3500 ENGINE CHAIN SAW

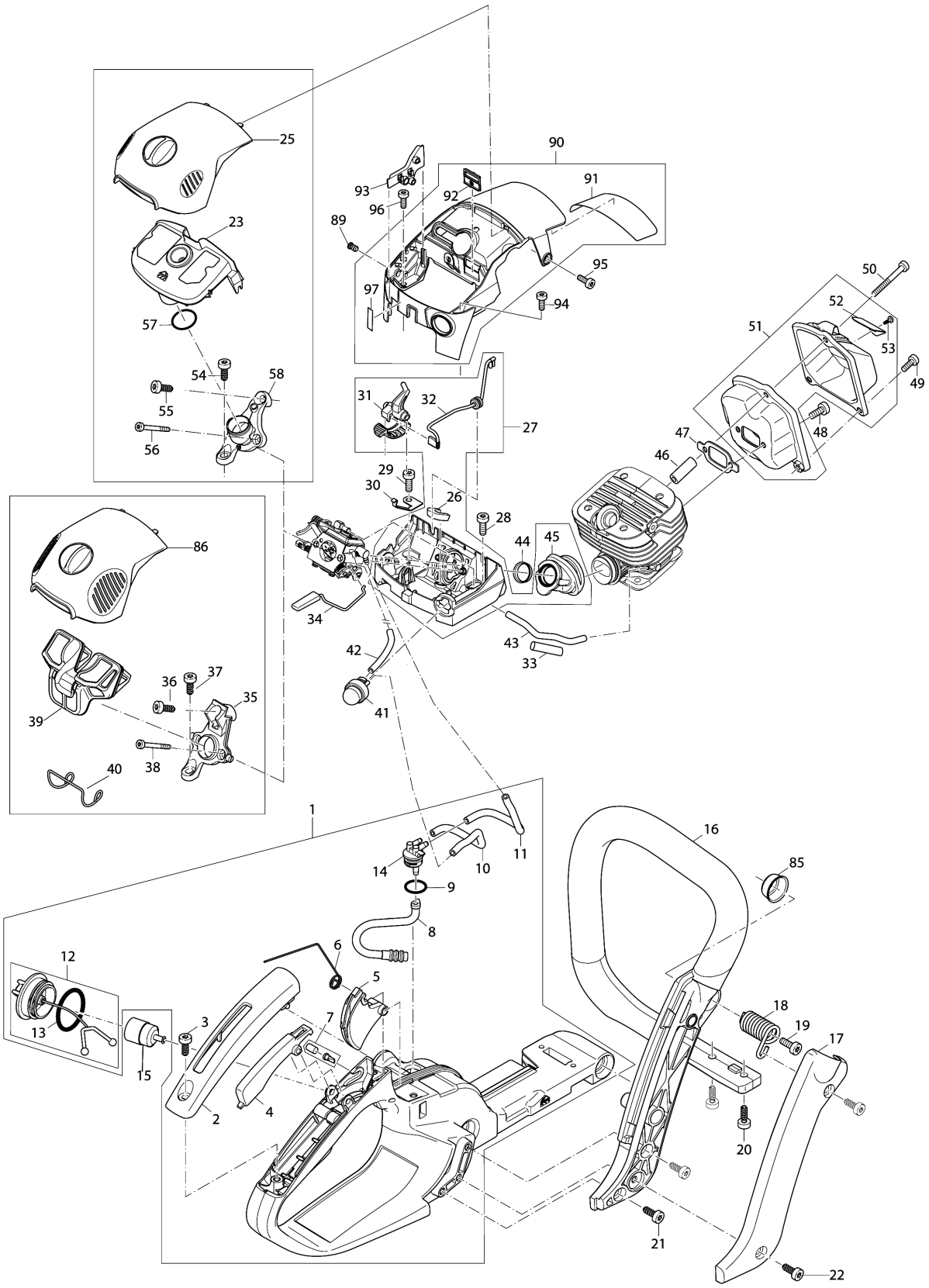

Model No.DCS3500 ENGINE CHAIN SAW

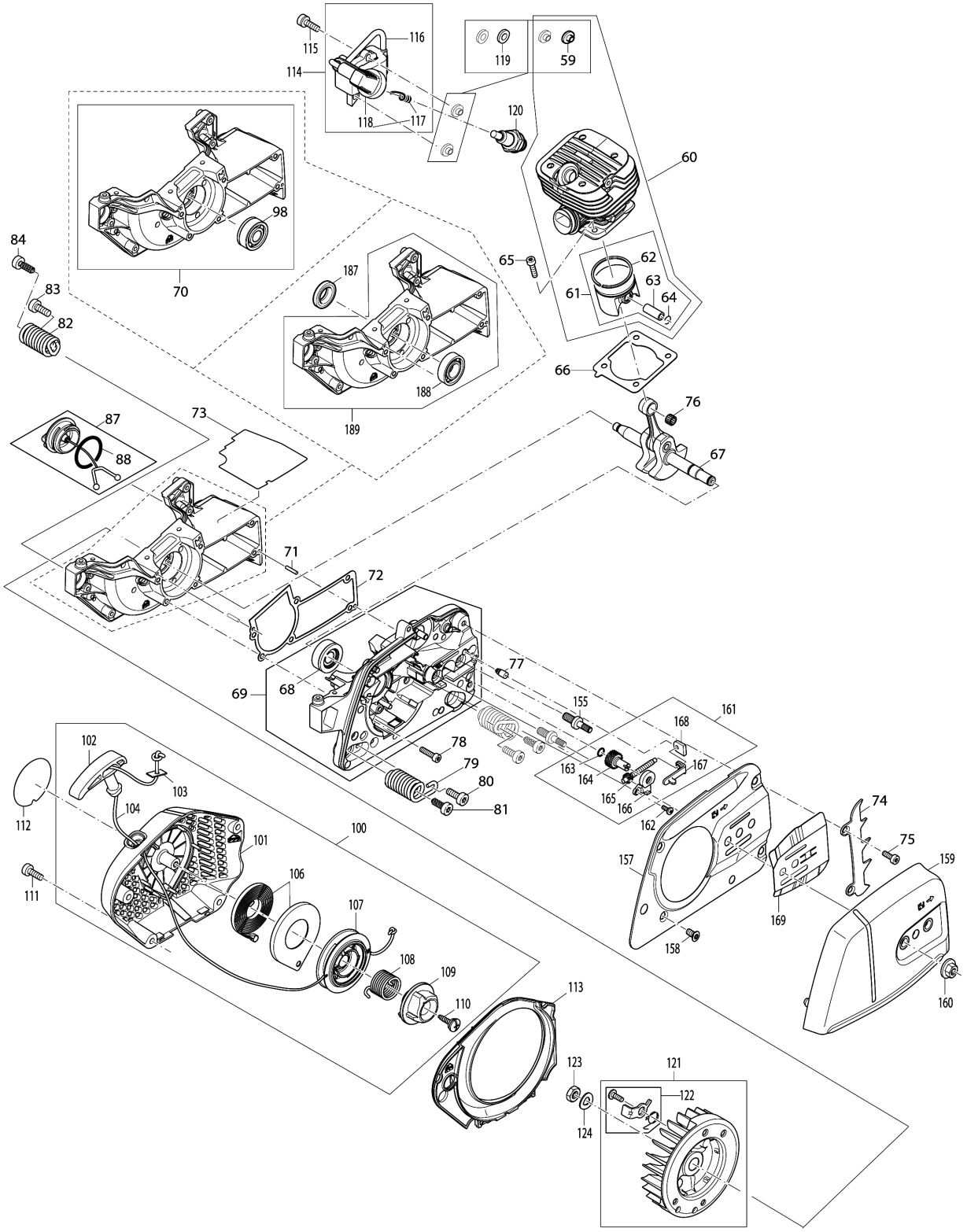

Model No.DCS3500 ENGINE CHAIN SAW

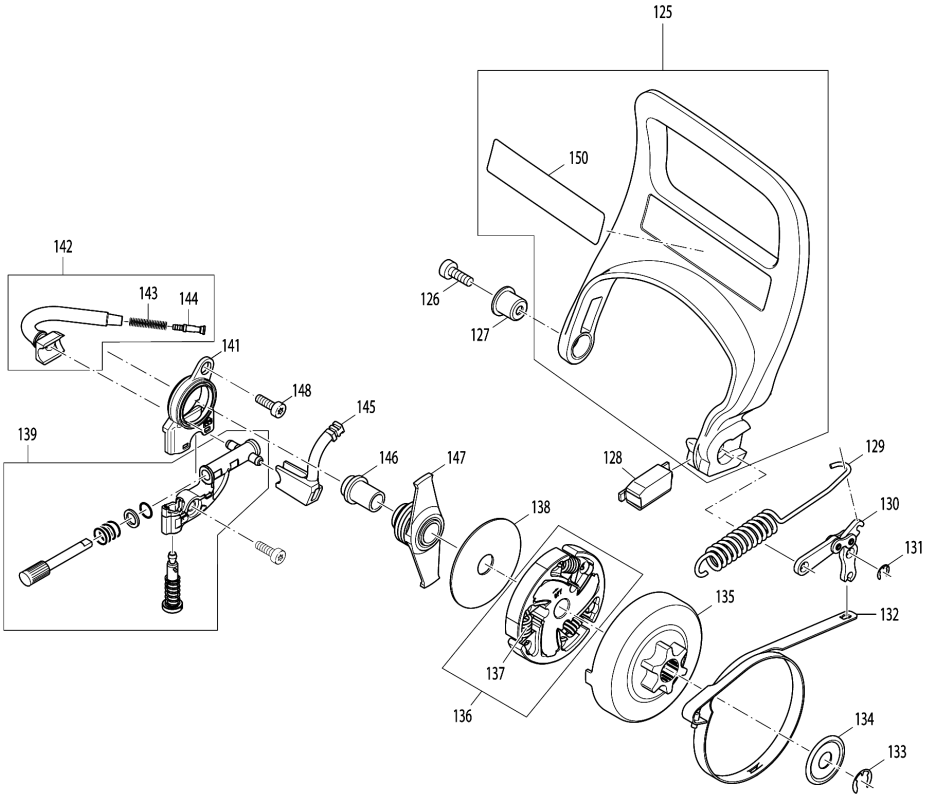

Model No.DCS3500 ENGINE CHAIN SAW

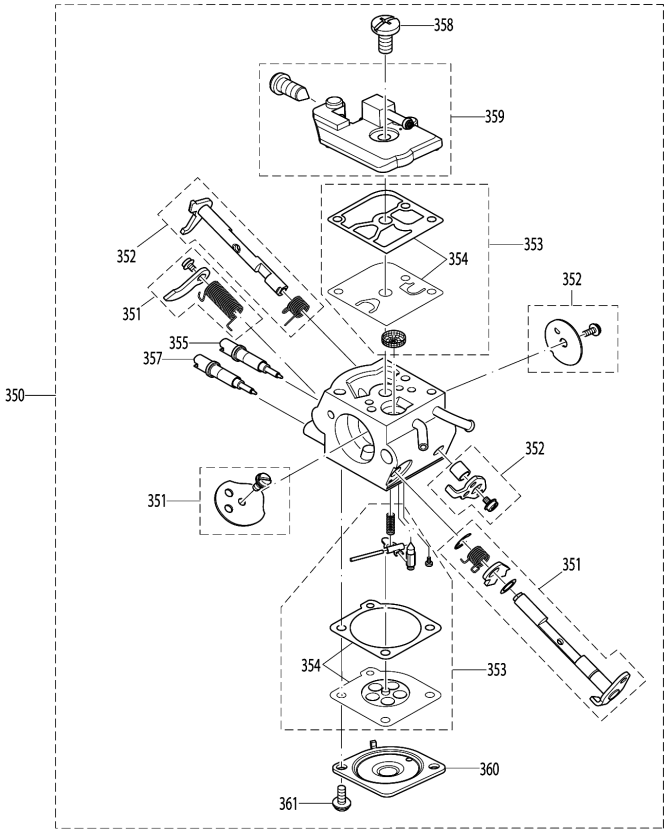

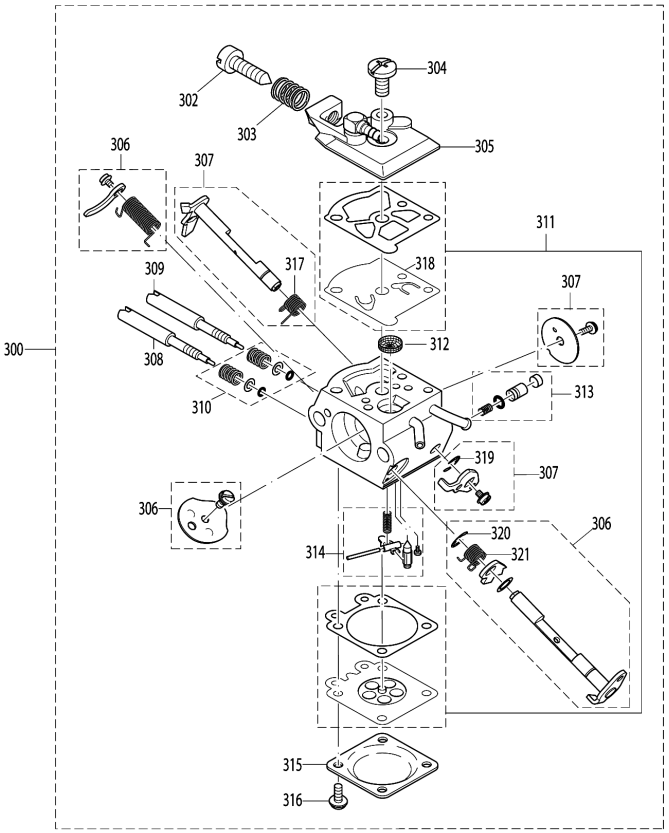

Model No.DCS3500 ENGINE CHAIN SAW

รายการ	รหัสอะไหล่	รายละเอียด	การแลกเปลี่ยน	จำนวน	New/Old	ขาย	ซื้อ	ข้อความ
001	195114672	FUEL TANK CPL. BLUE		1				
D10		INC. 2-12,14						
002	456143-0	GRIP OUTER SHELL		1				
003	266478-9	H.L.TAPPING SCREW 5.5X16		1				
004	456142-2	CATCH LEVER		1				
005	456141-4	THROTTLE LEVER		1				
006	231866-9	TORSION SPRING 10		1				
007	195762-4	AIR VALVE SET		1				
008	424456-7	FUEL LINE		1				
009	213586-7	O RING 11.5		1				
010	424756-5	TUBE 2.5-118		1				
011	424757-3	TUBE 3.0-93		1				
012	181114202	TANK CAP CPL.		1	*			
D10		INC. 13			*			
012-1	168507-3	TANK CAP COMPLETE	O	1				
D10		INC. 13						
013	213080-9	O RING 29.5		1				
014	452018-1	FUEL NIPPLE		1				
015	163447-0	FUEL FILTER		1				
016	195310010	FRONT HANDLE		1	*			
016-1	456140-6	TUBULAR HANDLE	O	1				
017	456151-1	SIDE COVER MAKITA BLUE		1				
018	234189-4	COMPRESSION SPRING 12		1				
019	266605-8	H.L. SOCKET HEAD BOLT M5X16		1				
020	266478-9	H.L.TAPPING SCREW 5.5X16		2				
021	266478-9	H.L.TAPPING SCREW 5.5X16		2				
022	266478-9	H.L.TAPPING SCREW 5.5X16		2				
023	123453-7	AIR FILTER FLEECE CPL.		1				
023A_	123452-9	AIR FILTER CPL.NYLON		1				
025	195118550	AIR FILTER COVER BLACK		1				
026	424752-3	PACKING RING		1				
027	195131301	CARBURETOR HOUSING CPL.		1				
D10		INC. 26,31,32,45						
028	266605-8	H.L. SOCKET HEAD BOLT M5X16		1				
029	266605-8	H.L. SOCKET HEAD BOLT M5X16		1				
030	195155050	CONTACT SPRING		1	*			
030-1	347357-1	CONTACT SPRING	O	1				
031	456139-1	CHOKE LEVER		1				
032	632F41-0	SHORT-CIRCUIT CABLE		1				

Please order the parts with part number. Print Date 24/8/2021

Model No.DCS3500 ENGINE CHAIN SAW

รายการ	รหัสอะไหล่	รายละเอียด	การแลกเปลี่ยน	จำนวน	New/Old	ขาย	ซื้อ	ข้อความ
033	424759-9	ISOLATING TUBE 6-30		1				
034	143330-7	THROTTLE LINKAGE		1				
035	195171010	AIR SUCTION PIPE		1	*			
036	266478-9	H.L.TAPPING SCREW 5.5X16		1	*			
037	266478-9	H.L.TAPPING SCREW 5.5X16		1	*			
038	251478-2	H.L. SOCKET HEAD BOLT M4X40		2	*			
039	195173100	AIR FILTER ELEMENT NYLON MESH		1	*			
040	325593-9	CLIP		1	*			
041	168398-2	PRIMER PUMP		1				
042	424754-9	TUBE 2.5-55		1				
043	424755-7	TUBE 2.5-93		1				
044	346413-4	BUSH 17		1				
045	424753-1	INTAKE HOSE		1				
046	038174030	SLEEVE 5 L=26.8MM		1	*			
046-1	325939-9	CONNECTING LINK	O	1				
047	346304-9	GASKET		1				
048	266605-8	H.L. SOCKET HEAD BOLT M5X16		2				
049	909005105	H.L. SOCKET HEAD BOLT M5X10		2	*			
049-1	266612-1	H.L. SOCKET HEAD BOLT M5X10	O	2				
050	908305405	H.L. SOCKET HEAD BOLT M5X40		1	*			
050-1	266943-8	H.L. SOCKET HEAD BOLT M5X40	O	1				
051	195174500	MUFFLER		1				
D10		INC. 52,53						
052	352027-9	SPARK ARRESTER SCREEN		1				
053	914535105	SELF TAPPING SCREW 3.5X9.5		1	*			
053-1	251477-4	SCREW 3.5X9.5	O	1				
054	266478-9	H.L.TAPPING SCREW 5.5X16		1				
055	266478-9	H.L.TAPPING SCREW 5.5X16		1				
056	251478-2	H.L. SOCKET HEAD BOLT M4X40		2				
057	213085-9	O-RING 20		1				
058	195171020	AIR SUCTION PIPE		1	*			
058-1	456135-9	INTAKE MANIFOLD	O	1				
059	451462-9	ISOLATING WASHER		2				
060	194131201	CYLINDER & PISTON CPL.		1				
D10		INC. 59,61						
061	194132100	PISTON, PISTON RING & PIN SET		1				
D10		INC. 62-64						

Please order the parts with part number. Print Date 24/8/2021

Model No.DCS3500 ENGINE CHAIN SAW

รายการ	รหัสอะไหล่	รายละเอียด	การแลกเปลี่ยน	จำนวน	New/Old	ขาย	ซื้อ	ข้อความ
062	194132020	PISTON RING		1				
063	268339-9	PISTON PIN 9		1				
064	195132050	CIRCLIP		2				
065	266960-8	H.L. SOCKET HEAD BOLT M5X20		4				
066	346925-7	CYLINDER BASE GASKET		1				
067	195120300	CRANKSHAFT CPL.		1				
068	219024-7	DEEP GROOVE BALL BEARING		1				
069	195111612	CRANKCASE RIGHT SIDE CPL. BLUE		1				
D10		INC. 68						
070	195111622	CRANKCASE LEFT SIDE CPL. BLUE		1	*			
D10		INC. 98			*			
071	951063-8	SPRING PIN 3-16		2				
072	346924-9	CRANK CASE GASKET		1				
073	346928-1	HEAT PROTECTION FOIL		1				
074	346301-5	SPIKE BAR		1				
075	266605-8	H.L. SOCKET HEAD BOLT M5X16		2				
076	962210092	NEEDLE CAGE		1				
077	168504-9	VENT VALVE		1				
078	266960-8	H.L. SOCKET HEAD BOLT M5X20		6				
079	234189-4	COMPRESSION SPRING 12		2				
080	266605-8	H.L. SOCKET HEAD BOLT M5X16		2				
081	266478-9	H.L.TAPPING SCREW 5.5X16		2				
082	234189-4	COMPRESSION SPRING 12		1				
083	266605-8	H.L. SOCKET HEAD BOLT M5X16		1				
084	266478-9	H.L.TAPPING SCREW 5.5X16		1				
085	195114160	SPRING GUIDING HEAD		1	*			
085-1	346517-2	CUP WASHER 6	O	1				
086	195118241	AIR FILTER COVER RED		1	*			
086-1	195118601	AIR FILTER COVER GREY		1				
087	168507-3	TANK CAP COMPLETE		1				
D10		INC. 88						
088	213080-9	O RING 29.5		1				
089	195151300	BLIND PLUG		1				
090	195118654	ENGINE HOOD CPL. BLUE		1	*			
D10		INC. 91,92,97			*			
090-1	161368-0	HOOD COMPLETE BLACK		1				
D10		INC. 91,92,97						
091	346929-9	PROTECTION FILM HOOD		1				

Please order the parts with part number. Print Date 24/8/2021

Model No.DCS3500 ENGINE CHAIN SAW

รายการ	รหัสอะไหล่	รายละเอียด	การแลกเปลี่ยน	จำนวน	New/Old	ขาย	ซื้อ	ข้อความ
092	195118141	ANTI ICING PLATE		1	*			
092-1	456157-9	SHUTTER PLATE	O	1				
093	195155031	ADJUSTING GUIDE		1	*			
093-1	456138-3	GUIDE	O	1				
094	266605-8	H.L. SOCKET HEAD BOLT M5X16		1				
095	266605-8	H.L. SOCKET HEAD BOLT M5X16		1				
096	266605-8	H.L. SOCKET HEAD BOLT M5X16		1				
097	816917-5	INDICATION LABEL		1				
098	219024-7	DEEP GROOVE BALL BEARING		1	*			
100	161365-6	STARTER COMPLETE BLUE		1				
D10		INC. 101-104,106-110						
101	195160691	STARTER HOUSING BLUE		1				
102	195160070	STARTER GRIP		1	*			
102-1	453783-5	STARTER GRIP	O	1				
103	267847-7	SQUARE WASHER 4		1				
104	444038-9	STARTER ROPE		1				
106	195160110	REWIND SPRING		1	*			
106-1	195955-3	REWIND SPRING SET	O	1				
107	453785-1	REEL		1	*			
107-1	455919-2	REEL		1				
108	234253-1	TORSION SPRING 20		1				
109	195160020	STARTER WHEEL		1				
110	266777-9	TAPPING SCREW 5X12		1				
111	266605-8	H.L. SOCKET HEAD BOLT M5X16		4				
112	980115163	LABEL DCS3500		1				
113	456137-5	AIR GUIDE PLATE		1				
114	195143200	IGNITION COIL CPL.		1	*			
D10		INC. 116,118			*			
114-1	161357-5	IGNITION COIL COMPLETE	O	1	*			
D10		INC. 116-118			*			
114-2	161357-5	IGNITION COIL COMPLETE	O	1				
D10		INC. 116-118						
115	266472-1	TORX SOCKET HEAD BOLT M5X20		2				
116	444042-8	ISOLATING TUBE 6-80		1				
117	234358-7	TERMINAL SPRING		1				
118	957604220	PLUG CAP CPL.		1	*			
D10		INC. 117			*			
118-1	424750-7	PLUG CAP	<	1				
119	195143020	ISOLATION WASHER		2	*			

Please order the parts with part number. Print Date 24/8/2021

Model No.DCS3500 ENGINE CHAIN SAW

รายการ	รหัสอะไหล่	รายละเอียด	การแลกเปลี่ยน	จำนวน	New/Old	ขาย	ซื้อ	ข้อความ
120	168648-5	SPARK PLUG (BPMR7A)		1				
121	143331-5	FLYWHEEL COMPLETE		1				
D10		INC. 122						
122	185166100	STARTER RATCHET SET(2PCS EACH)		1				
123	920308024	HEX. NUT M8X1 (FINE THREAD)		1	*			
123-1	264022-6	HEX. NUT M8X1	O	1				
124	926208001	SPRING WASHER 8		1	*			
124-1	267822-3	SPRING WASHER 8	O	1				
125	195213500	HAND GUARD CPL.		1	*			
D10		INC. 150			*			
125-1	195213502	HAND GUARD COMPLETE	<	1				
D10		INC. 150						
126	266605-8	H.L. SOCKET HEAD BOLT M5X16		1				
127	181213320	BUSHING		1	*			
127-1	325604-0	BUSH	O	1				
128	181213170	HANDGUARD GUIDE,CPL.		1	*			
128-1	450926-0	STOPPER CASE	O	1				
129	181213023	TENSION SPRING		1	*			
129-1	231870-8	TENSION SPRING 10	O	1				
130	163500-2	LINK PLATE COMPLETE		1				
131	961011-9	STOP RING E-4		1				
132	346029-5	BRAKE BAND		1				
133	259045-7	STOP RING E-8		1				
134	267820-7	WASHER 29		1				
135	143339-9	CLUTCH DRUM COMPLETE		1				
136	181180300	CLUTCH ASSY		1	*			
D10		INC. 137			*			
136-1	127443-2	CLUTCH ASSEMBLY	O	1				
D10		INC. 137						
137	232352-3	TENSION SPRING 6		3	*			
137-1	232352-3	TENSION SPRING 6	O	3				
138	267389-1	FLAT WASHER 12		1				
139	161346-0	OIL PUMP COMPLETE		1				
141	195245140	OIL PUMP COVER		1				
142	144274-4	TUBE COMPLETE		1				
D10		INC. 143,144						
143	231975-4	SPRING		1				
144	001245020	HOSE STEM		1				
145	181245120	OIL LINE		1	*			

Please order the parts with part number. Print Date 24/8/2021

Model No.DCS3500 ENGINE CHAIN SAW

รายการ	รหัสอะไหล่	รายละเอียด	การแลกเปลี่ยน	จำนวน	New/Old	ขาย	ซื้อ	ข้อความ
145-1	424178-9	OIL TUBE	O	1				
146	195245010	BUSHING		1	*			
146-1	326596-6	BUSH	O	1				
147	181245090	PUMP DRIVE		1	*			
147-1	450956-1	PUMP DRIVE	O	1				
148	266605-8	H.L. SOCKET HEAD BOLT M5X16		2				
150	810449-4	CAUTION LABEL		1	*			
150-1	818N32-5	CAUTION LABEL	<	1				
155	266978-9	BOLT		2				
157	346927-3	CHAIN BRAKE COVER		1				
158	266477-1	H.L. C.S. HEAD SCREW M5X12		2				
159	195213601	SPROCKET GUARD CPL. BLUE		1	*			
159-1	161791-9	SPROCKET GUARD CPL. MAKITA	O	1				
160	923208004	HEX. FLANGE NUT M8(BAR NUT)		2	*			
160-1	252145-2	COLLARED HEX NUT M8	O	2				
161	195213300	CHAIN TENSIONER COMPLETE		1				
D10		INC. 163-168						
162	251480-5	TAPPING SCREW ST3.5X9.5		1				
163	213594-8	O RING 7		1				
164	181213250	ADJUSTING SCREW		1	*			
164-1	227744-9	HELICAL GEAR 18	O	1				
165	181213230	TESIONING SCREW		1	*			
165-1	227743-1	HELICAL GEAR 11	O	1				
166	452667-4	GEAR COVER PROFESSIONAL		1				
167	346300-7	TENSION SLIDE		1				
168	181213260	TENSIONING SCREW BEARING		1				
169	346518-0	GUIDE PLATE		1				
187	213141-5	OIL SEAL 12		1				
188	960102131	BALL BEARING 6201		1				
189	195111662	CRANKCASE LEFT SIDE CPL. BLUE		1	*			
D10		INC. 188			*			
189-1	144394-4	CRANKCASE MS COMPLETE BLUE	O	1				
D10		INC. 188						
300	195151102	CARBURETOR CPL.		1	*			
D10		INC. 302-316			*			
302	378151210	IDLE STOP SCREW		1	*			
303	021151230	PRESSURE SPRING		1	*			
304	118151190	SCREW		1	*			
305	195151350	PUMP COVER		1	*			

Please order the parts with part number. Print Date 24/8/2021

Model No.DCS3500 ENGINE CHAIN SAW

รายการ	รหัสอะไหล่	รายละเอียด	การแลกเปลี่ยน	จำนวน	New/Old	ขาย	ซื้อ	ข้อความ
306	957151210	KIT CHOKE SHAFT		1	*			
D10		INC. 320,321			*			
307	957151200	KIT THROTTLE SHAFT		1	*			
D10		INC. 317,319			*			
308	195151530	MAIN ADJUSTMENT SCREW		1	*			
309	195151520	IDLE ADJUSTMENT SCREW		1	*			
310	957151240	SET SPRINGS / WASHERS		1	*			
311	957151220	SET DIAPHRAGM / GASKETS		1	*			
D10		INC. 318			*			
312	021151180	SCREEN		1	*			
313	957151070	ACCELERATOR PUMP SET		1	*			
314	957151230	SET OF CONTROL PARTS		1	*			
315	021151120	DIAPHRAGM COVER		1	*			
316	378151220	SCREW		4	*			
317	001151310	SPRING		1	*			
318	021151150	PUMP DIAPHRAGM,RUBBER		1	*			
319	119151350	SHAFT CLIP		1	*			
320	119151350	SHAFT CLIP		1	*			
321	195151490	SPRING		1	*			
350	195153101	CARBURETOR (NON REGULATED)		1	*			
D10		INC. 351-353,355,357-361			*			
350-1	161370-3	CARBURETOR DM24B	O	1				
D10		INC. 351-353,355,357-361						
351	195153580	CHOKE SHAFT SET		1				
352	195153570	THROTTLE SHAFT SET		1				
353	195153510	REPAIR KIT		1				
D10		INC. 354						
354	195153500	GASKETS & DIAPHRAGM SET		1				
355	ZJ00000026	SCREW,IDLE MIXTURE		1				
357	ZJ00000039	SCREW,MAIN MIXTURE		1				
358	038153360	SCREW		1				
359	195153230	PUMP COVER CPL.		1				
360	ZJ00000028	COVER,METERING		1				
361	ZJ00000014	SCREW (WITH SERRATION)		2				
A01	442030661	GUIDE BAR STD 12″3/8″.050″ M		1	*			
A01-1	165200-0	GUIDE BAR 12	O	1				
A01A_	165200-0	GUIDE BAR 12		1	*			
A01A1	165200-0	GUIDE BAR 12	O	1				
A01B_	442035661	GUIDE BAR STD 14″3/8″.050″ M		1				

Please order the parts with part number. Print Date 24/8/2021

Model No.DCS3500 ENGINE CHAIN SAW

รายการ	รหัสอะไหล่	รายละเอียด	การแลกเปลี่ยน	จำนวน	New/Old	ขาย	ซื้อ	ข้อความ
A01C_	165201-8	GUIDE BAR 14		1	*			
A01C1	165201-8	GUIDE BAR 14	O	1				
A01D_	442040661	GUIDE BAR STD 16″3/8″.050″ M		1				
A01E_	165202-6	GUIDE BAR 16		1	*			
A01E1	165202-6	GUIDE BAR 16	O	1				
A02	531492646	SAW CHAIN 3/8LP.050″ L46 CC M		1				
D10		INC. A03,A04						
A02A_	196211-4	SAW CHAIN 12 SET		1	*			
D10		INC. A03,A04			*			
A02A1	196211-4	SAW CHAIN 12 SET	O	1				
D10		INC. A03,A04						
A02B_	196206-7	SAW CHAIN SET		1				
D10		INC. A03,A04						
A02C_	196442-5	SAW CHAIN SET		1				
A02D_	531492652	SAW CHAIN 3/8LP.050″ L52 CC M		1				
D10		INC. A03,A04						
A02E_	196212-2	SAW CHAIN 14 SET		1	*			
D10		INC. A03,A04			*			
A02E1	196212-2	SAW CHAIN 14 SET	O	1				
D10		INC. A03,A04						
A02F_	196207-5	SAW CHAIN SET		1				
D10		INC. A03,A04						
A02G_	196443-3	SAW CHAIN SET		1				
D10		INC. A03,A04						
A02H_	958492656	SAW CHAIN 3/8LP.050″ L56 CC M		1				
D10		INC. A03,A04						
A02I_	196213-0	SAW CHAIN 16 SET		1	*			
D10		INC. A03,A04			*			
A02I1	196213-0	SAW CHAIN 16 SET	O	1				
D10		INC. A03,A04						
A02J_	196208-3	SAW CHAIN SET		1				
D10		INC. A03,A04						
A02K_	196444-1	SAW CHAIN SET		1				
D10		INC. A03,A04						
A03	558092000	TIE STRAP 3/8LP 1.3MM/.050″		1				
A04	558092010	TIE STRAP WITH RIVETS 3/8LP050		1				
A10	419559-0	CHAIN PROTECTION COVER 330		1				

Please order the parts with part number. Print Date 24/8/2021

Model No.DCS3500 ENGINE CHAIN SAW

รายการ	รหัสอะไหล่	รายละเอียด	การแลกเปลี่ยน	จำนวน	New/Old	ขาย	ซื้อ	ข้อความ
A10A_	952010640	BAR COVER 14-17″35-43CM MAKITA		1	*			
A10A1	419560-5	CHAIN PROTECTION COVER 430	O	1				
A12	941719133	UNIVERSAL WRENCH 13/19		1	*			
A12-1	782033-4	UNIVERSAL WRENCH 13/19	O	1				
A13	940827000	HEXALOBULAR ANGLED DRIVER T27		1	*			
A13-1	782025-3	TORX WRENCH	O	1				
A14	783012-5	SCREWDRIVER		1				

Please order the parts with part number. Print Date 24/8/2021