Model No.EK7650H POWER CUTTER

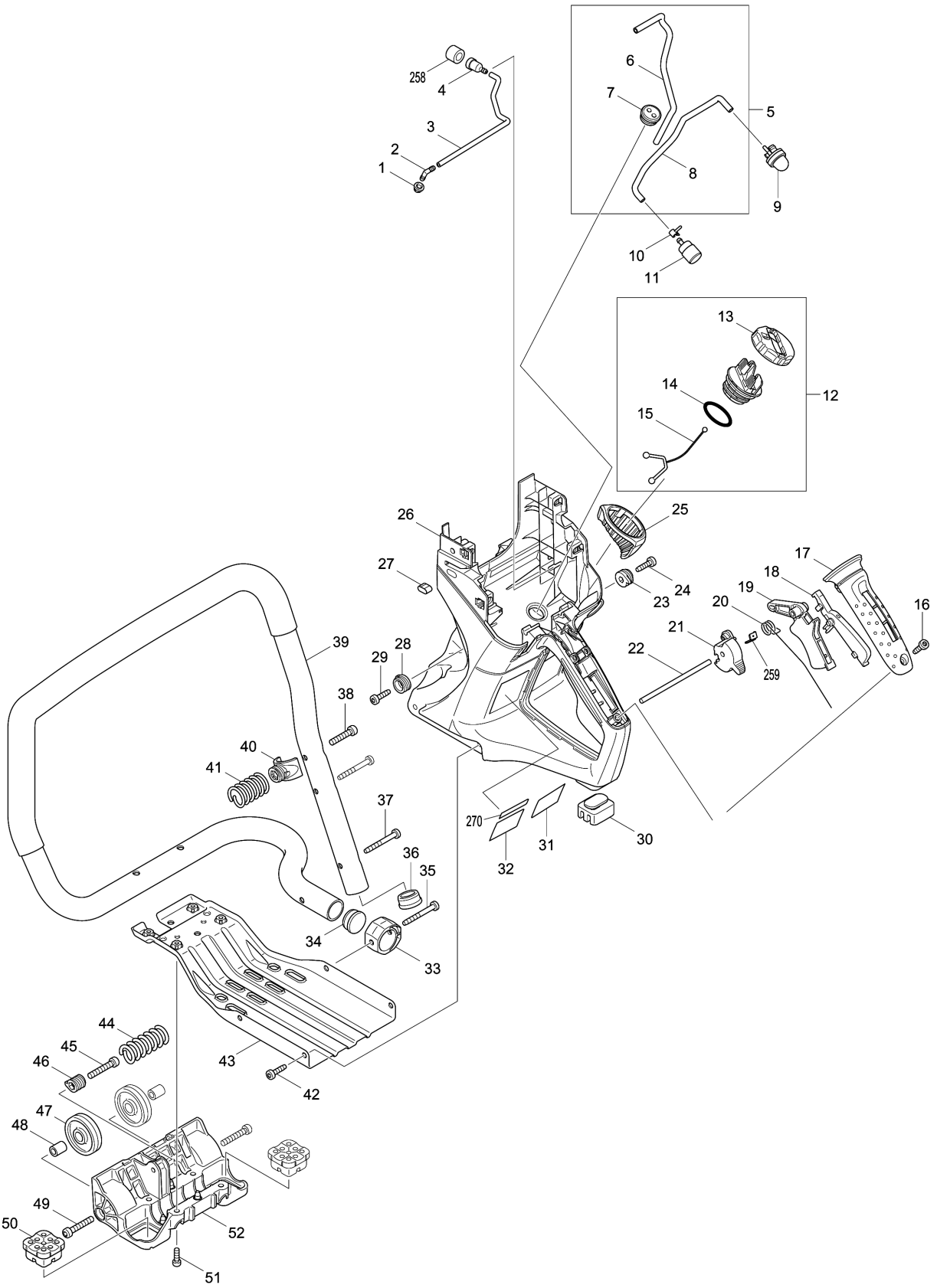

Model No.EK7650H POWER CUTTER

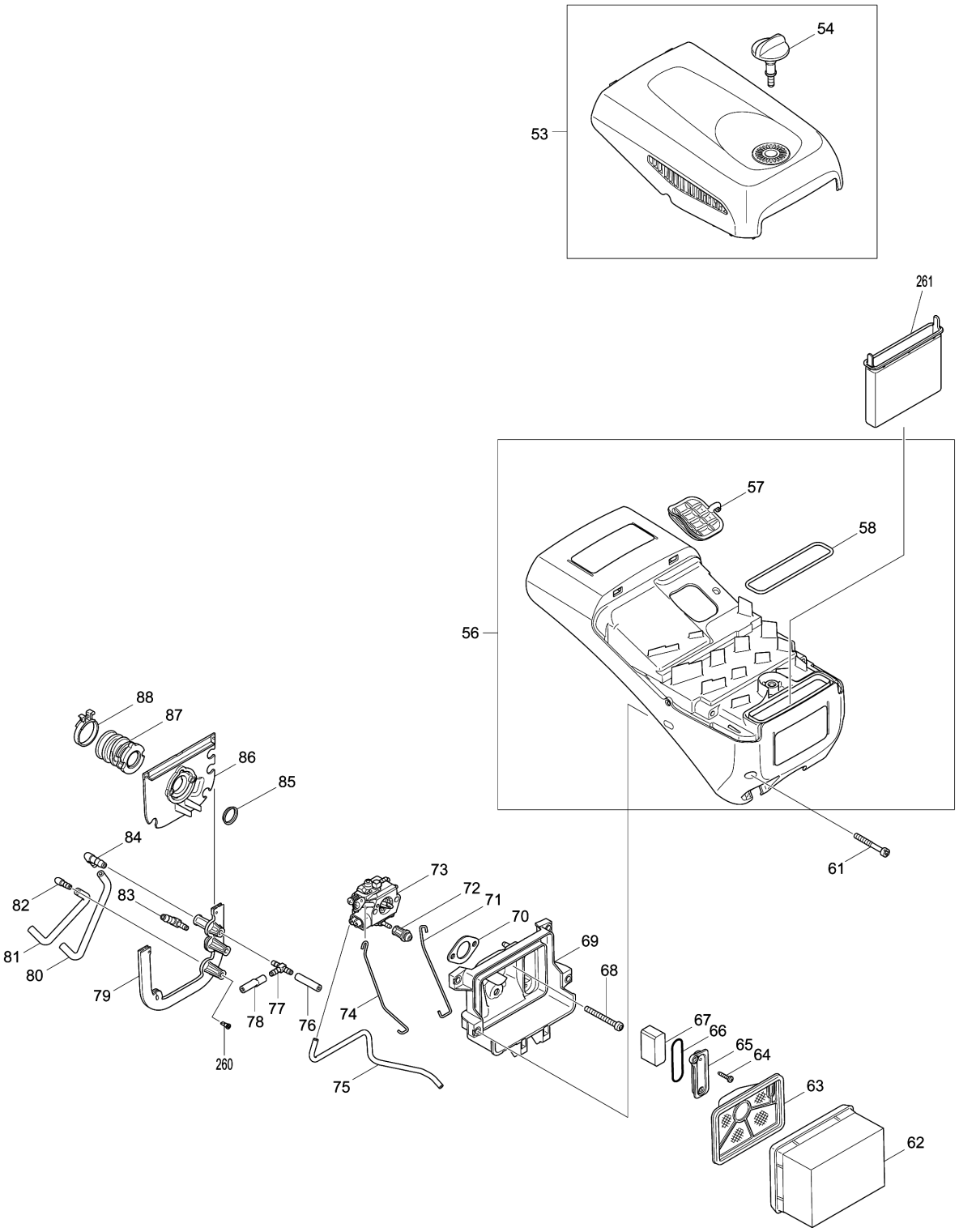

Model No.EK7650H POWER CUTTER

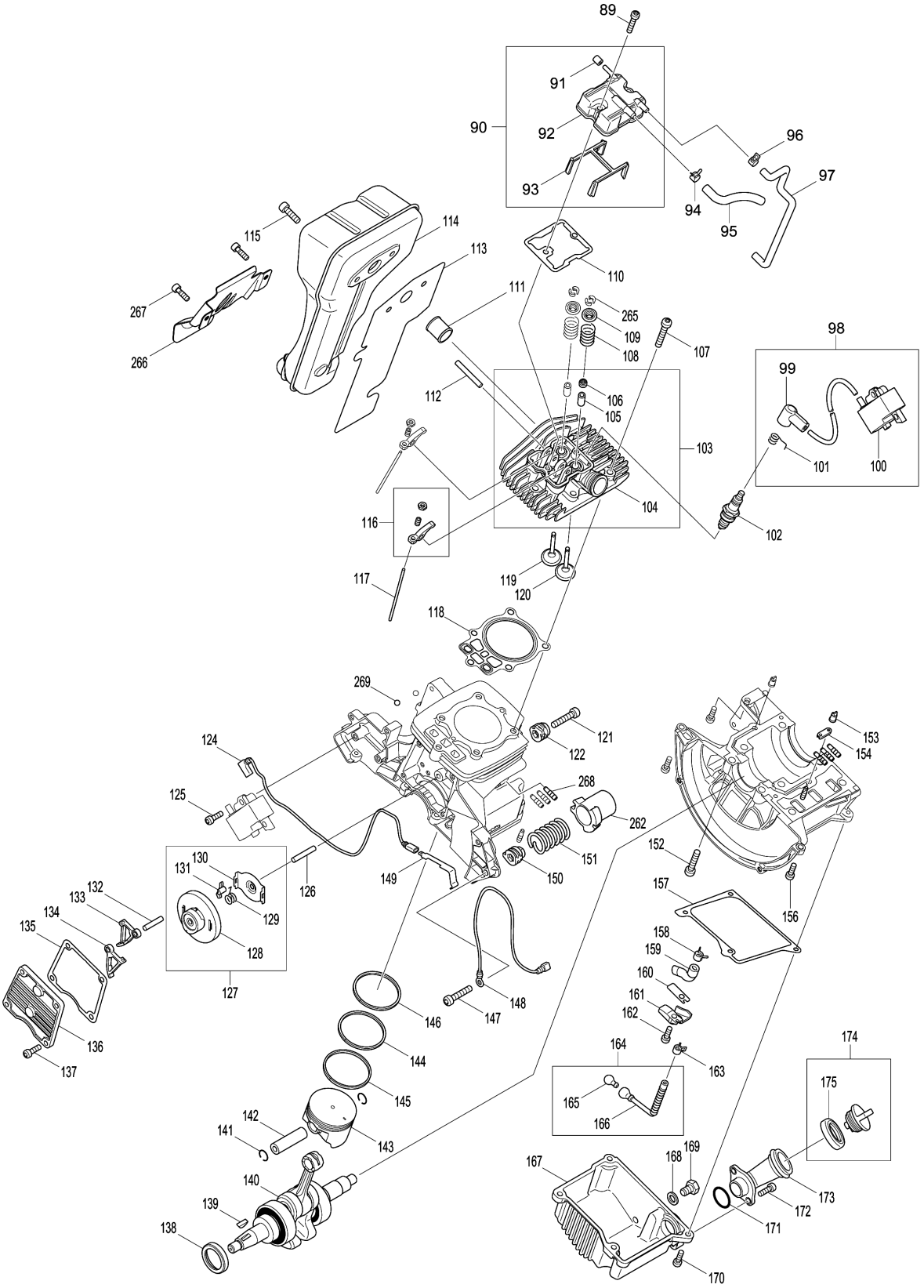

Model No.EK7650H POWER CUTTER

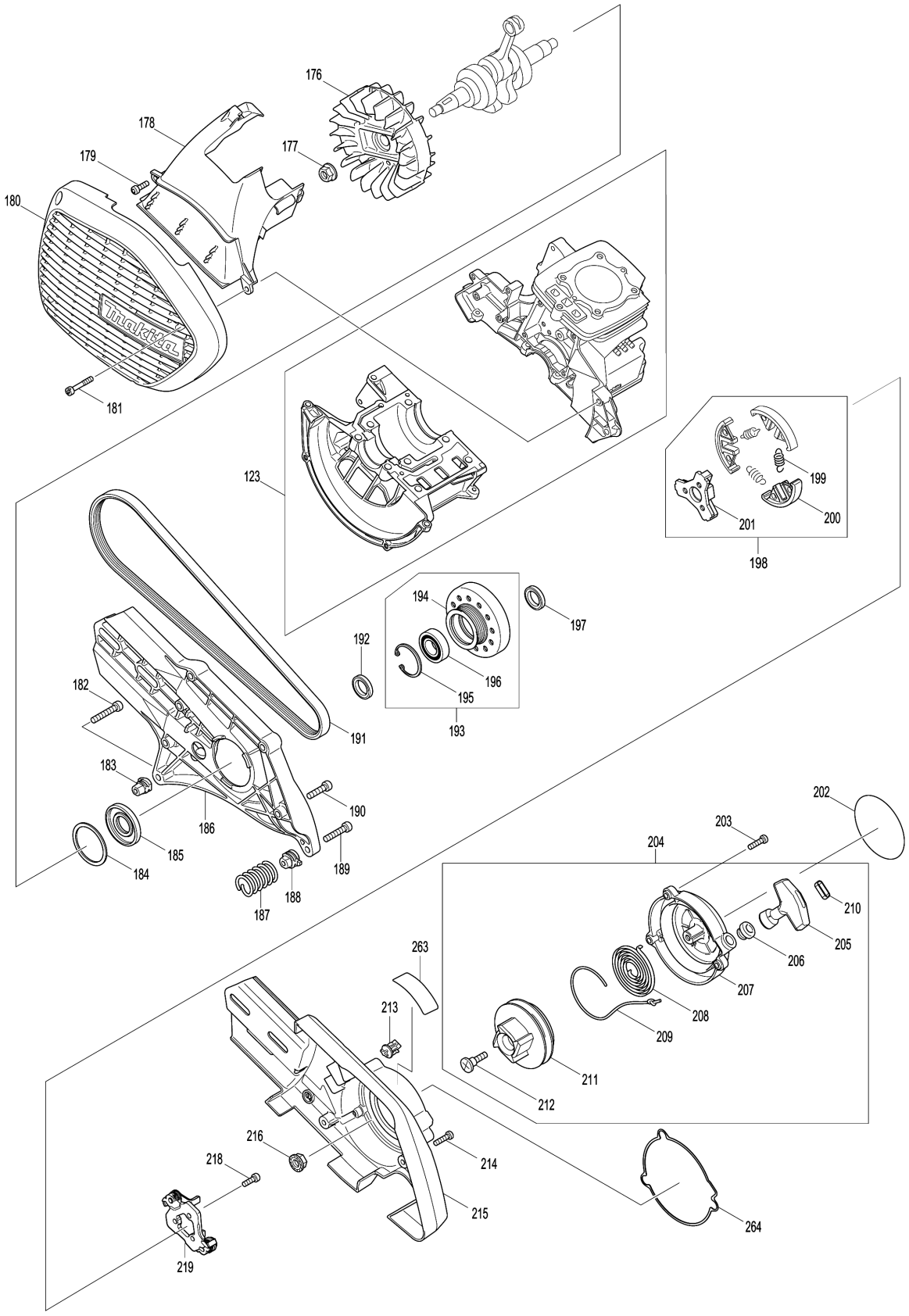

Model No.EK7650H POWER CUTTER

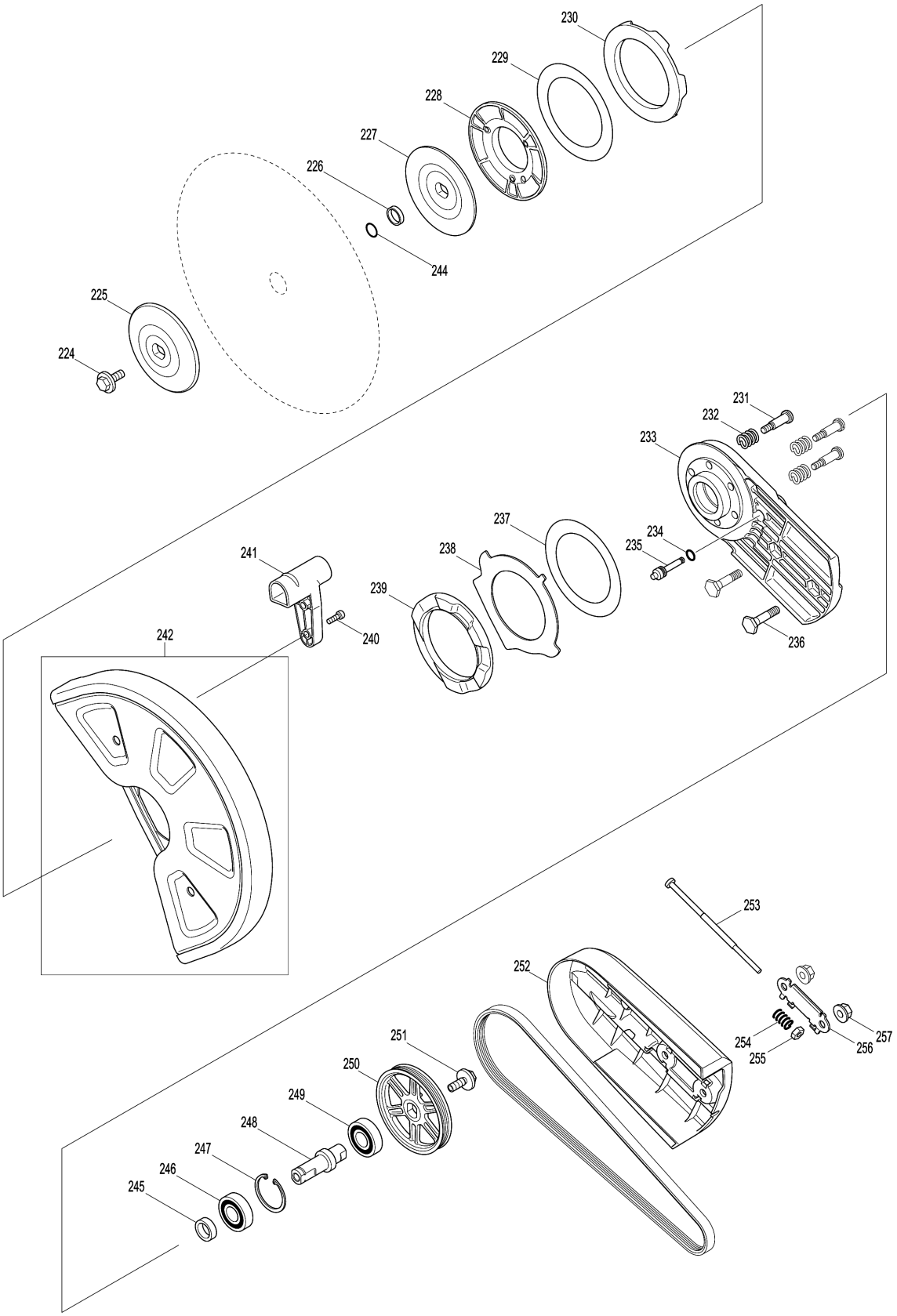

Model No.EK7650H POWER CUTTER

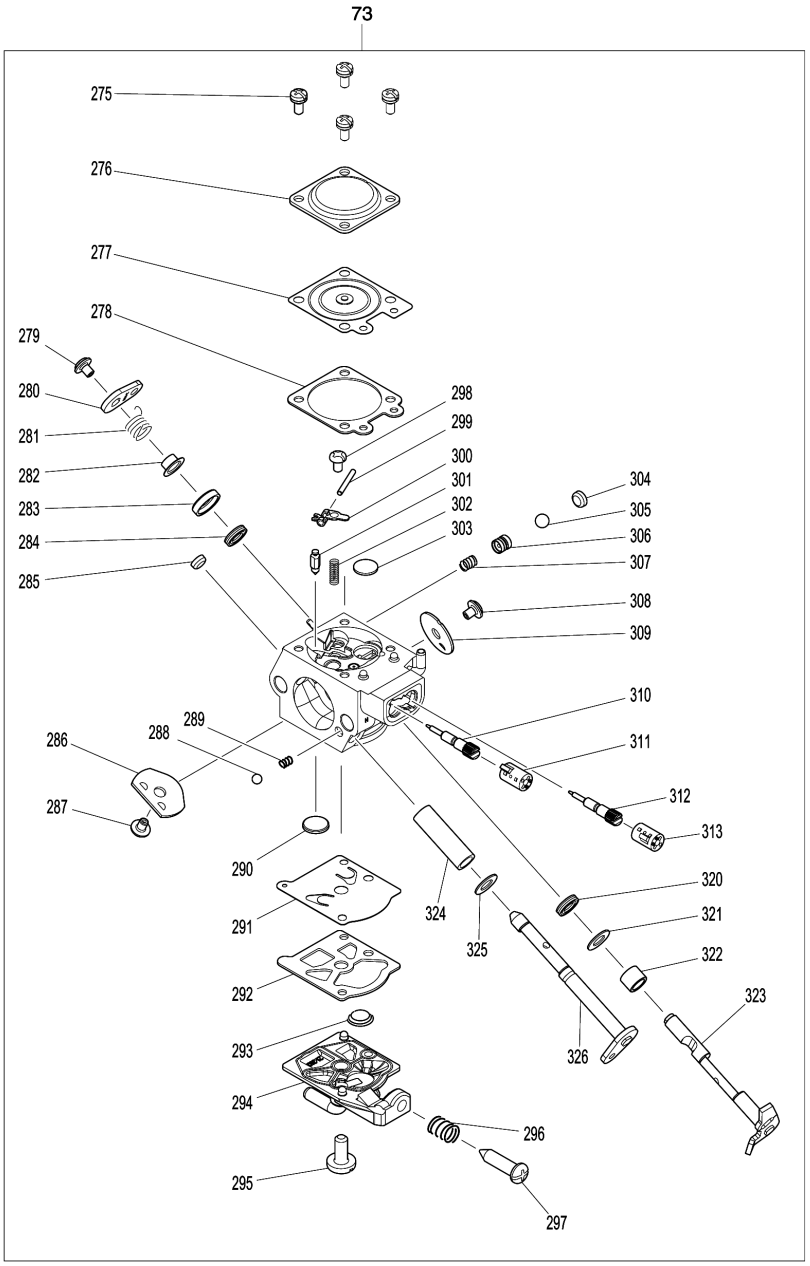

Model No.EK7650H POWER CUTTER

รายการ	รหัสอะไหล่	รายละเอียด	การแลกเปลี่ยน	จำนวน	New/Old	ขาย	ซื้อ	ข้อความ
001	421875-8	GROMMET		1				
002	452800-8	HOSE JOINT 4-4		1				
003	422083-4	TUBE 3-190		1				
004	168396-6	BREATHER		1				
005	142150-6	TUBE COMPLETE		1				
D10		INC. 6-8						
006	422074-5	TUBE 3-120		1				
007	424101-4	FUEL GROMMET		1				
008	422119-9	FUEL TUBE 3-300		1				
009	168398-2	PRIMER PUMP		1				
010	324616-0	HOSE CLAMP		1				
011A	163447-0	FUEL FILTER		1	*			
011-1A	163447-0	FUEL FILTER	O	1				
011-1B	163447-0	FUEL FILTER		1				
012	140831-6	TANK CAP COMPLETE		1				
D10		INC. 13-15						
013	452697-5	TANK CAP KNOB		1				
014A	213080-9	O RING 29.5		1	*			
014-1A	213831-0	O-RING 29.5	<	1				
014-1B	213831-0	O-RING 29.5		1				
015	450957-9	STRAP		1				
016	266475-5	H.L.TAPPING SCREW 5.5X20		1				
017	452736-1	GRIP COVER		1				
018	452722-2	LOCK OFF LEVER		1				
019	452721-4	THROTTLE LEVER		1				
020	233590-0	TORSION SPRING 12		1				
021	452723-0	SWITCH LEVER		1				
022	256520-4	ROD 5		1				
023	452742-6	REAR INNER HOLDER		1				
024	266475-5	H.L.TAPPING SCREW 5.5X20		1				
025	424408-8	TANK GUARD		1				
026	140774-2	TANK COMPLETE		1				
C20	264066-6	SQUARE NUT M5-10		4				
C20	264066-6	SQUARE NUT M5-10		4				
C10	898274-3	INDICATION LABEL		1				
027	424583-0	PLUG		1				
028	452742-6	REAR INNER HOLDER		1				
029	266475-5	H.L.TAPPING SCREW 5.5X20		1				
030	424404-6	REAR FOOT		1				
031A	869677-8	EK7650H NAME PLATE		1	*			

Please order the parts with part number. Print Date 14/8/2021

Model No.EK7650H POWER CUTTER

รายการ	รหัสอะไหล่	รายละเอียด	การแลกเปลี่ยน	จำนวน	New/Old	ขาย	ซื้อ	ข้อความ
031-1A	850F83-4	EK7650H NAME PLATE	O	1				
031-1B	850F83-4	EK7650H NAME PLATE		1				
033	452737-9	CLAMP		1				
034	424410-1	RUBBER CAP		1				
035	266687-0	TAPPING SCREW 5.5X45		1				
036	424410-1	RUBBER CAP		1				
037	266687-0	TAPPING SCREW 5.5X45		2				
038	266659-5	H.L. SOCKET HEAD BOLT M6X30		1				
039	331940-4	FRONT HANDLE		1				
040	452741-8	CENTER OUTER HOLDER		1				
041	234214-1	COMPRESSION SPRING 16		1				
042	266475-5	H.L.TAPPING SCREW 5.5X20		3				
043	346433-8	BOTTOM PLATE		1				
044	234213-3	COMPRESSION SPRING 13		1				
045	266659-5	H.L. SOCKET HEAD BOLT M6X30		1				
046	452740-0	FRONT INNER HOLDER		1				
047	318727-1	ROLLER 45		2				
048	257972-2	SLEEVE 6.5		2				
049	266660-0	H.L. SOCKET HEAD BOLT M6X35		2				
050	424405-4	FRONT FOOT		2				
051A	266652-9	H.L. SOCKET HEAD BOLT M5X16		4	*			
051-1A	266849-0	H.L.SOCKET HEAD BOLT M5X16	O	4				
051-1B	266849-0	H.L.SOCKET HEAD BOLT M5X16		4				
052	318712-4	GUARD		1				
053	140903-7	TOP COVER COMPLETE		1				
D10		INC. 54						
054	266692-7	THUMB SCREW M6X15		1				
056	141040-0	FILTER COVER COMPLETE		1				
C10	893210-4	CAUTION LABEL		1				
C20	893211-2	CAUTION LABEL		1				
D10		INC. 57,58						
057	424409-6	PLUG COVER		1				
058	424417-7	PACKING		1				
061	266656-1	H.L. SOCKET HEAD BOLT M5X40		4				
062	442165-6	AIR FILTER		1				
063	424399-3	INNER FILTER		1				
064	266127-8	+ TAPPING SCREW PT 3X20		2				
065	452739-5	SEPARATER COVER		1				

Please order the parts with part number. Print Date 14/8/2021

Model No.EK7650H POWER CUTTER

รายการ	รหัสอะไหล่	รายละเอียด	การแลกเปลี่ยน	จำนวน	New/Old	ขาย	ซื้อ	ข้อความ
066	213459-4	O RING 32		1				
067	352012-2	SEPARATOR MESH		1				
068	266657-9	H.L. SOCKET HEAD BOLT M5X45		2				
069	452720-6	FILTER BRACKET		1				
070	442166-4	CARBURETOR GASKET		1				
071	326040-3	THROTTLE LINKAGE		1				
072	424407-0	RUBBER JOINT		1				
073	168653-2	CARBURETOR WT		1				
D10		INC. 275-293,296-313,320-326						
D10		INC. 275-293,296-313,320-326						
074	326041-1	CHOKE LINKAGE		1				
075	422077-9	TUBE 3-190		1				
076	422080-0	TUBE 3-35		1				
077	452952-5	HOSE JOINT		1				
078	422079-5	TUBE 3-45		1				
079	424418-5	SEAL		1				
080	422082-6	TUBE 3-130		1				
081	422081-8	TUBE 3-75		1				
082	452951-7	HOSE JOINT 4-4		1				
083	452799-7	HOSE JOINT 4-6		1				
084	452799-7	HOSE JOINT 4-6		1				
085	346397-6	GUIDE RING		1				
086	452724-8	CARBURETOR MOUNT		1				
087	424397-7	SUCTION LINE		1				
088	346495-6	HOSE CLAMP 30		1				
089A	266654-5	H.L. SOCKET HEAD BOLT M5X25		2	*			
089-1A	266852-1	H.L.SOCKET HEAD BOLT M5X25	O	2				
089-1B	266852-1	H.L.SOCKET HEAD BOLT M5X25		2				
090	140898-4	ROCKER COVER COMPLETE		1				
D10		INC. 91-93						
091	422073-7	TUBE 3-8		1				
092	318708-5	ROCKER COVER		1				
093	452726-4	OIL LINE		1				
094	345918-1	HOSE CLAMP		1				
095	422078-7	TUBE 5-70		1				
096	345918-1	HOSE CLAMP		1				
097	422076-1	TUBE 3-170		1				
098	126006-1	IGNITION COIL ASSEMBLY		1				

Please order the parts with part number. Print Date 14/8/2021

Model No.EK7650H POWER CUTTER

รายการ	รหัสอะไหล่	รายละเอียด	การแลกเปลี่ยน	จำนวน	New/Old	ขาย	ซื้อ	ข้อความ
D10		INC. 99-101						
099	424105-6	PLUG CAP		1				
100	125920-8	IGNITION COIL		1				
101	326148-3	PLUG CAP SPRING		1				
102	168652-4	SPARK PLUG		1				
103A	125946-0	CYLINDER HEAD ASSEMBLY		1	*			
D10		INC. 104-106			*			
103-1A	135752-5	CYLINDER HEAD ASSEMBLY	<	1	*			
C10	125946-0	CYLINDER HEAD ASSEMBLY		1	*			
D10		INC. 104-106,108,109,112			*			
D20		INC. 116,119,120,265			*			
103-2A	135785-0	CYLINDER HEAD ASS'Y	S	1				
C10	123772-1	CYLINDER HEAD ASSEMBLY		1				
D10		INC. 104-106,108,109,112						
D20		INC. 116,119,120,265						
103-2B	135785-0	CYLINDER HEAD ASS'Y		1				
C10	123772-1	CYLINDER HEAD ASSEMBLY		1				
D10		INC. 104-106,108,109,112						
D20		INC. 116,119,120,265						
104A	140928-1	CYLINDER HEAD COMPLETE		1	*			
104-1A	144051-4	CYLINDER HEAD COMPLETE	S	1				
104-1B	144051-4	CYLINDER HEAD COMPLETE		1				
105	331969-0	VALVE GUIDE		2				
106	424424-0	VALVE STEM SEAL		1				
107	266660-0	H.L. SOCKET HEAD BOLT M6X35		5				
108	234212-5	COMPRESSION SPRING 11		2				
109	331966-6	RETAINER		2				
110A	346400-3	ROCKER COVER GASKET		1	*			
110-1A	161301-2	ROCKER COVER GASKET	<	1				
110-1B	161301-2	ROCKER COVER GASKET		1				
111	331937-3	EXHAUST PORT SPACER		1				
112A	256201-0	PIN 5		1	*			
112-1A	268310-3	PIN 5	O	1				
112-1B	268310-3	PIN 5		1				
113	346399-2	MUFFLER GASKET		1				
114A	168638-8	EXHAUST MUFFLER		1	*			
114-1A	161532-3	EXHAUST MUFFLER	S	1				
114-1B	161532-3	EXHAUST MUFFLER		1				
115A	266693-5	H.L. SOCKET HEAD BOLT M6X18		3	*			

Please order the parts with part number. Print Date 14/8/2021

Model No.EK7650H POWER CUTTER

รายการ	รหัสอะไหล่	รายละเอียด	การแลกเปลี่ยน	จำนวน	New/Old	ขาย	ซื้อ	ข้อความ
115-1A	266693-5	H.L. SOCKET HEAD BOLT M6X18	<	3				
115-1B	266693-5	H.L. SOCKET HEAD BOLT M6X18		3				
116	126005-3	ROCKER ARM ASSEMBLY		2				
117	256526-2	PUSH ROD		2				
118	442167-2	CYLINDER HEAD GASKET		1				
119	331965-8	EXHAUST VALVE		1				
120	331964-0	INTAKE VALVE		1				
121	266659-5	H.L. SOCKET HEAD BOLT M6X30		1				
122	318729-7	CENTER INNER HOLDER		1				
123A	140901-1	CYLINDER BLOCK COMPLETE		1	*			
123-1A	123578-7	ENGINE BLOCK ASSY(FOR SERVICE)	<	1				
C10	140901-1	CYLINDER BLOCK COMPLETE		1				
D10		INC. 89,90,103,107,110,117,118						
D20		INC. 126,127,132-138,140-146						
D30		INC. 152-154,156-164,167-174						
D40		INC. 184,185						
123-1B	123578-7	ENGINE BLOCK ASSY(FOR SERVICE)		1				
C10	140901-1	CYLINDER BLOCK COMPLETE		1				
D10		INC. 89,90,103,107,110,117,118						
D20		INC. 126,127,132-138,140-146						
D30		INC. 152-154,156-164,167-174						
D40		INC. 184,185						
124	638776-5	LEAD UNIT		1				
125A	266652-9	H.L. SOCKET HEAD BOLT M5X16		2	*			
125-1A	266849-0	H.L.SOCKET HEAD BOLT M5X16	O	2				
125-1B	266849-0	H.L.SOCKET HEAD BOLT M5X16		2				
126	256200-2	PIN 5		1				
127A	125934-7	CAM GEAR ASSEMBLY		1	*			
D10		INC. 128-131			*			
127-1A	123299-1	CAM GEAR ASSEMBLY	<	1				
D10		INC. 128-131						
127-1B	123299-1	CAM GEAR ASSEMBLY		1				
D10		INC. 128-131						
128	140817-0	CAM GEAR COMPLETE		1				
129A	233582-9	TORSION SPRING 9		1	*			

Please order the parts with part number. Print Date 14/8/2021

Model No.EK7650H POWER CUTTER

รายการ	รหัสอะไหล่	รายละเอียด	การแลกเปลี่ยน	จำนวน	New/Old	ขาย	ซื้อ	ข้อความ
129-1A	233623-1	TORSION SPRING 9	<	1				
129-1B	233623-1	TORSION SPRING 9		1				
130	346434-6	CAM GEAR PLATE		1				
131	318707-7	FLY WEIGHT		1				
132	256186-0	PIN 5		1				
133	313209-8	CAM LIFTER L		1				
134	313210-3	CAM LIFTER R		1				
135	442168-0	CAM GEAR GASKET		1				
136	318725-5	CAM GEAR COVER		1				
137A	266652-9	H.L. SOCKET HEAD BOLT M5X16		4	*			
137-1A	266849-0	H.L.SOCKET HEAD BOLT M5X16	O	4				
137-1B	266849-0	H.L.SOCKET HEAD BOLT M5X16		4				
138A	213599-8	OIL SEAL 17		1	*			
138-1A	213599-8	OIL SEAL 17	O	1	*			
138-2A	213091-4	OIL SEAL 17	<	1				
138-2B	213091-4	OIL SEAL 17		1				
139	254001-2	WOODRUFF KEY 4		1				
140	140900-3	CRANKSHAFT COMPLETE		1	*			
140-1	127538-1	CRANKSHAFT ASSEMBLY	O	1				
141	233995-4	RING SPRING 12		2				
142	326039-8	PISTON PIN		1				
143A	318726-3	PISTON		1	*			
143-1A	197457-5	PISTON SET	<	1				
C10	318726-3	PISTON		1				
D10		INC. 141,144						
143-1B	197457-5	PISTON SET		1				
C10	318726-3	PISTON		1				
D10		INC. 141,144						
144A	257332-8	SECOND RING		1	*			
144-1A	197458-3	PISTON RING SET	<	1				
144-1B	197458-3	PISTON RING SET		1				
145A	257333-6	OIL RING		1	*			
146A	257331-0	TOP RING		1	*			
147	266659-5	H.L. SOCKET HEAD BOLT M6X30		1				
148	638777-3	LEAD UNIT		1				
149	232268-2	CONTACT SPRING		1				
150	318730-2	REAR OUTER HOLDER		1				
151	234214-1	COMPRESSION SPRING 16		1				
152	266659-5	H.L. SOCKET HEAD BOLT M6X30		8				

Please order the parts with part number. Print Date 14/8/2021

Model No.EK7650H POWER CUTTER

รายการ	รหัสอะไหล่	รายละเอียด	การแลกเปลี่ยน	จำนวน	New/Old	ขาย	ซื้อ	ข้อความ
153	424201-0	CHECK VALVE		2				
154	424406-2	GROMMET		1				
156A	266652-9	H.L. SOCKET HEAD BOLT M5X16		3	*			
156-1A	266849-0	H.L.SOCKET HEAD BOLT M5X16	O	3				
156-1B	266849-0	H.L.SOCKET HEAD BOLT M5X16		3				
157	452738-7	OIL CASE GASKET		1				
158	345918-1	HOSE CLAMP		1				
159	422084-2	TUBE 5-55		1				
160	346398-4	LEAD VALVE		1				
161	318709-3	RETAINER PLATE		1				
162A	266652-9	H.L. SOCKET HEAD BOLT M5X16		1	*			
162-1A	266849-0	H.L.SOCKET HEAD BOLT M5X16	O	1				
162-1B	266849-0	H.L.SOCKET HEAD BOLT M5X16		1				
163	345918-1	HOSE CLAMP		1				
164	168655-8	OIL TUBE COMPLETE		1				
D10		INC. 165,166						
165	326177-6	OIL WEIGHT		1				
166	424384-6	OIL TUBE		1				
167	318710-8	OIL CASE		1				
168	346452-4	GASKET		1				
169	921412-3	HEX. BOLT M8X12		1				
170A	266652-9	H.L. SOCKET HEAD BOLT M5X16		4	*			
170-1A	266849-0	H.L.SOCKET HEAD BOLT M5X16	O	4				
170-1B	266849-0	H.L.SOCKET HEAD BOLT M5X16		4				
171	213548-5	O-RING 20		1				
172	266862-8	H.L.S.H. BOLT M5X16 WITH WR		2				
173	452614-5	OIL PIPE		1				
174	140899-2	OIL CAP COMPLETE		1				
D10		INC. 175						
175	424421-6	OIL CAP GASKET		1				
176	318704-3	FLYWHEEL		1				
177	264054-3	FLANGE NUT M10		1				
178	452617-9	CYLINDER COVER		1				
179A	266652-9	H.L. SOCKET HEAD BOLT M5X16		1	*			
179-1A	266849-0	H.L.SOCKET HEAD BOLT M5X16	O	1				
179-1B	266849-0	H.L.SOCKET HEAD BOLT M5X16		1				

Please order the parts with part number. Print Date 14/8/2021

Model No.EK7650H POWER CUTTER

รายการ	รหัสอะไหล่	รายละเอียด	การแลกเปลี่ยน	จำนวน	New/Old	ขาย	ซื้อ	ข้อความ
180	452616-1	FAN COVER		1				
181	266655-3	H.L. SOCKET HEAD BOLT M5X30		4				
182	266659-5	H.L. SOCKET HEAD BOLT M6X30		1				
183	318728-9	FRONT OUTER HOLDER		1				
184	267448-1	FLAT WASHER 41		1				
185A	213598-0	OIL SEAL(L)		1	*			
185-1A	213090-6	OIL SEAL(L)	<	1				
185-1B	213090-6	OIL SEAL(L)		1				
186A	318711-6	CUTTING ARM		1	*			
186-1A	319234-7	CUTTING ARM	S	1				
186-1B	319234-7	CUTTING ARM		1				
187	234214-1	COMPRESSION SPRING 16		1				
188	318730-2	REAR OUTER HOLDER		1				
189	266659-5	H.L. SOCKET HEAD BOLT M6X30		1				
190	266658-7	H.L. SOCKET HEAD BOLT M6X25		5				
191	225094-6	V BELT 5-800		1				
192	331970-5	SPACER17		1				
193	125945-2	CLUTCH DRUM ASSEMBLY		1				
D10		INC. 194-196						
194	165636-3	CLUTCH DRUM		1				
195	962163-9	RETAINING RING R-35		1				
196	210138-5	BALL BEARING 6003LLU		1				
197	331970-5	SPACER17		1				
198A	168656-6	CLUTCH COMPLETE		1	*			
D10		INC. 199-201			*			
198-1A	168834-8	CLUTCH COMPLETE	<	1				
D10		INC. 199-201						
198-1B	168834-8	CLUTCH COMPLETE		1				
D10		INC. 199-201						
199A	231871-6	TENSION SPRING 6		3	*			
199-1A	231884-7	TENSION SPRING 6	<	3				
199-1B	231884-7	TENSION SPRING 6		3				
200	313207-2	CLUTCH SHOE		3				
201	313208-0	CLUTCH HOLDER		1				
202	893120-5	EK7650H MODEL NO.LABEL		1				
203	266792-3	H.L. SOCKET HEAD BOLT M5X18		3				
204	125919-3	STARTER ASSEMBLY		1	*			
D10		INC. 205-212			*			
204-1	125919-3	STARTER ASSEMBLY	O	1				

Please order the parts with part number. Print Date 14/8/2021

Model No.EK7650H POWER CUTTER

รายการ	รหัสอะไหล่	รายละเอียด	การแลกเปลี่ยน	จำนวน	New/Old	ขาย	ซื้อ	ข้อความ
D10		INC. 205-212						
205	424501-8	STARTER KNOB		1	*			
205-1	SG00000060	STARTER KNOB	O	1	*			
205-2	424501-8	STARTER KNOB	O	1				
206	332046-1	ROPE GUIDE		1	*			
206-1	SG00000058	STARTER CASE COMPLETE	O	1				
207	452613-7	STARTER CASE		1	*			
208	232262-4	SPIRAL SPRING		1	*			
208-1	SG00000014	SPIRAL SPRING	O	1				
209	444040-2	STARTER ROPE		1	*			
209-1	SG00000059	STARTER ROPE	O	1				
210	424500-0	ROPE STOPPER		1	*			
210-1	SG00000061	ROPE STOPPER	O	1				
211	453466-7	REEL		1	*			
211-1	SG00000015	REEL	O	1				
212	266634-1	SET SCREW M6X20		1	*			
212-1	SG00000013	SET SCREW M6X20	O	1				
213	452930-5	HOLDER		1				
214A	266653-7	H.L. SOCKET HEAD BOLT M5X20		3	*			
214-1A	266847-4	H.L.SOCKET HEAD BOLT M5X20	O	3	*			
214-2A	266851-3	H.L.BIND BOLT M5X20	<	3				
214-2B	266851-3	H.L.BIND BOLT M5X20		3				
215A	452621-8	CLUTCH COVER		1	*			
215-1A	455559-6	CLUTCH COVER	S	1				
215-1B	455559-6	CLUTCH COVER		1				
216	264080-2	HEX. LOCK NUT M10-17		1				
218A	266784-2	H.L. SOCKET HEAD BOLT M5X12		3	*			
218-1A	266859-7	H.L.SOCKET HEAD BOLT M5X12	O	3				
218-1B	266859-7	H.L.SOCKET HEAD BOLT M5X12		3				
219A	140816-2	RATCHET COMPLETE		1	*			
219-1A	144100-7	RATCHET COMPLETE	O	1				
C10	347089-0	RATCHET		2				
C20	347090-5	RATCHET HOLDER		1				
C30	251505-5	HEX. BOLT M5		2				
C40	232333-7	TORSION SPRING 15		2				
219-1B	144100-7	RATCHET COMPLETE		1				
C10	347089-0	RATCHET		2				
C20	347090-5	RATCHET HOLDER		1				
C30	251505-5	HEX. BOLT M5		2				

Please order the parts with part number. Print Date 14/8/2021

Model No.EK7650H POWER CUTTER

รายการ	รหัสอะไหล่	รายละเอียด	การแลกเปลี่ยน	จำนวน	New/Old	ขาย	ซื้อ	ข้อความ
C40	232333-7	TORSION SPRING 15		2				
224	266690-1	HEX. BOLT M8X25		1				
225A	224443-4	FLANGE 102		1	*			
225-1A	224478-5	FLANGE 102	O	1				
225-1B	224478-5	FLANGE 102		1				
226	257314-0	RING 17		1				
227A	224443-4	FLANGE 102		1	*			
227-1A	224478-5	FLANGE 102	O	1				
227-1B	224478-5	FLANGE 102		1				
228	318746-7	PRESSURE RING		1				
229	442169-8	SLIDING DISC		1				
230	424426-6	RUBBER RING(INNER)		1				
231A	266689-6	H.L.COLLAR BOLT M6		3	*			
231-1A	266970-5	H.L.SOCKET HEAD COLLAR BOLT M6	O	3				
231-1B	266970-5	H.L.SOCKET HEAD COLLAR BOLT M6		3				
232A	234216-7	COMPRESSION SPRING 8		3	*			
232-1A	234374-9	COMPRESSION SPRING 8	O	3				
232-1B	234374-9	COMPRESSION SPRING 8		3				
233	318722-1	CUTTING DEVICE		1				
234	213625-3	O-RING 9		1				
235	326038-0	LOCK SHAFT		1				
236A	266688-8	HEX. BOLT M8		2	*			
236-1A	266969-0	HEX. BOLT M8	<	2				
236-1B	266969-0	HEX. BOLT M8		2				
237	442169-8	SLIDING DISC		1				
238	346455-8	IMPACT PLATE		1				
239	424427-4	RUBBER RING(OUTER)		1				
240	266725-8	H.L.SOCKET HEAD BOLT M5X16		2	*			
240-1	265642-9	H.L.SOCKET HEAD BOLT M5X16	O	2				
241	452938-9	GRIP		1				
242	140925-7	HOOD COMPLETE		1				
C10	893215-4	CAUTION LABEL		1				
244	213162-7	O RING 14		1				
245	257971-4	RING 17		1				
246	211281-3	BALL BEARING 6203LLU		1				
247	962157-4	RETAINING RING R-40		1				
248	326062-3	SPINDLE		1				
249	211281-3	BALL BEARING 6203LLU		1				
250	222174-9	V PULLEY 5-95.8		1				

Please order the parts with part number. Print Date 14/8/2021

Model No.EK7650H POWER CUTTER

รายการ	รหัสอะไหล่	รายละเอียด	การแลกเปลี่ยน	จำนวน	New/Old	ขาย	ซื้อ	ข้อความ
251	266690-1	HEX. BOLT M8X25		1				
252A	452698-3	BELT COVER		1	*			
252-1A	455936-2	BELT COVER	S	1				
252-1B	455936-2	BELT COVER		1				
253	266691-9	TENSIONING SCREW M6		1	*			
253-1	265644-5	TENSIONING SCREW M6	O	1				
254	234215-9	COMPRESSION SPRING 6		1				
255	252157-5	SQUARE NUT M6		1				
256	346457-4	PLATE		1				
257A	264081-0	HEX. NUT M8		2	*			
257-1A	264055-1	COLLARED HEX. NUT M8	S	2				
257-1B	264055-1	COLLARED HEX. NUT M8		2				
258	424023-8	SPONGE SLEEVE 9		1				
259	346554-6	PLATE		1				
260	424316-3	CHECK VALVE		1				
261	166106-5	DUST BAG		1				
262	424499-9	RUBBER SLEEVE 22		1				
263	800E23-6	CAUTION LABEL		1				
264	346611-0	STARTER COVER GASKET		1				
265	331967-4	COTTER		4				
266A	346589-7	MUFFLER GUARD		1	*			
267A	266782-6	H.L.S. HEAD BOLT M5X16 WITH WG		2	*			
268	325665-0	JOINT PIPE		4				
269	331897-9	BALL		2				
270A	897179-4	SERIAL NO. LABEL		1	*			
270-1A	850F72-9	SERIAL NO. LABEL	O	1				
270-1B	850F72-9	SERIAL NO. LABEL		1				
275A	WJ00096589	SCREW ASSEMBLY		4				
275B	WJ00096589	SCREW ASSEMBLY		4				
276A	141943-8	METERING COVER ASSEMBLY		1				
276B	141943-8	METERING COVER ASSEMBLY		1				
277A	168620-7	METERING DIAPHRAGM		1				
277B	168620-7	METERING DIAPHRAGM		1				
278A	442183-4	METERING DIAPHRAGM GASKET		1				
278B	442183-4	METERING DIAPHRAGM GASKET		1				
279A	WJ00096475	SCREW		1				
279B	WJ00096475	SCREW		1				
280A	WJ00183498	THROTTLE LEVER		1				
280B	WJ00183498	THROTTLE LEVER		1				

Please order the parts with part number. Print Date 14/8/2021

Model No.EK7650H POWER CUTTER

รายการ	รหัสอะไหล่	รายละเอียด	การแลกเปลี่ยน	จำนวน	New/Old	ขาย	ซื้อ	ข้อความ
281A	WJ00983707	SPRING		1				
281B	WJ00983707	SPRING		1				
282A	WJ00014886	BUSHING 148-86		1				
282B	WJ00014886	BUSHING 148-86		1				
283A	WJ00148545	BUSHING		1				
283B	WJ00148545	BUSHING		1				
284A	WJ00015631	THROTTLE SHAFT SEAL		1				
284B	WJ00015631	THROTTLE SHAFT SEAL		1				
285A	WJ00088119	PLUG CAP		1				
285B	WJ00088119	PLUG CAP		1				
286A	WJ00343480	CHOKE VALVE		1				
286B	WJ00343480	CHOKE VALVE		1				
287A	WJ00096475	SCREW		1				
287B	WJ00096475	SCREW		1				
288A	5806122220	BALL		1				
288B	5806122220	BALL		1				
289A	5806122210	SPRING		1				
289B	5806122210	SPRING		1				
290A	352010-6	INLET SCREEN		1	*			
290-1A	WJ00014070	INLET SCREEN	O	1				
290-1B	WJ00014070	INLET SCREEN		1				
291A	WJ00009589	PUMP DIAPHRAGM		1				
291B	WJ00009589	PUMP DIAPHRAGM		1				
292A	442192-3	PUMP GASKET		1	*			
292-1A	WJ00092225	GASKET-PUMP	O	1				
292-1B	WJ00092225	GASKET-PUMP		1				
293A	234183-6	CONICAL COMPRESSION SPRING 5-9		1				
293B	234183-6	CONICAL COMPRESSION SPRING 5-9		1				
296A	5106045250	SPRING		1	*			
296-1A	WJ00098217	SPRING	O	1				
296-1B	WJ00098217	SPRING		1				
297A	WJ00096368	IDLE ADJUST SCREW		1				
297B	WJ00096368	IDLE ADJUST SCREW		1				
298A	5016004110	SCREW		1				
298B	5016004110	SCREW		1				
299A	WJ00014477	METERING LEVER PIN		1				
299B	WJ00014477	METERING LEVER PIN		1				
300A	WJ00016648	LEVER		1				
300B	WJ00016648	LEVER		1				
301A	WJ00008282	INLET NEEDLE VALVE		1				

Please order the parts with part number. Print Date 14/8/2021

Model No.EK7650H POWER CUTTER

รายการ	รหัสอะไหล่	รายละเอียด	การแลกเปลี่ยน	จำนวน	New/Old	ขาย	ซื้อ	ข้อความ
301B	WJ00008282	INLET NEEDLE VALVE		1				
302A	234277-7	COMPRESSION SPRING 3		1				
302B	234277-7	COMPRESSION SPRING 3		1				
303A	5416036160	PLUG-WELCH		1				
303B	5416036160	PLUG-WELCH		1				
304A	WJ00088229	CUP PLUG		1				
304B	WJ00088229	CUP PLUG		1				
305A	WJ00008995	BALL		1				
305B	WJ00008995	BALL		1				
306A	WJ00160580	PISTON ASSEMBLY ACCELERATOR		1				
306B	WJ00160580	PISTON ASSEMBLY ACCELERATOR		1				
307A	WJ00983164	SPRING		1				
307B	WJ00983164	SPRING		1				
308A	WJ00096475	SCREW		1				
308B	WJ00096475	SCREW		1				
309A	5806122260	THROTTLE VALVE		1				
309B	5806122260	THROTTLE VALVE		1				
310A	WJ01023347	NEEDLE		1				
310B	WJ01023347	NEEDLE		1				
311A	WJ00025162	LIMITER CAP		1				
311B	WJ00025162	LIMITER CAP		1				
312A	WJ01023343	NEEDLE		1				
312B	WJ01023343	NEEDLE		1				
313A	WJ00025162	LIMITER CAP		1				
313B	WJ00025162	LIMITER CAP		1				
320A	WJ00015631	THROTTLE SHAFT SEAL		1				
320B	WJ00015631	THROTTLE SHAFT SEAL		1				
321A	WJ00136194	WASHER		1				
321B	WJ00136194	WASHER		1				
322A	WJ00014896	SPACER-THROTTLE LEVER		1				
322B	WJ00014896	SPACER-THROTTLE LEVER		1				
323A	WJ00224273	SHAFT ASSEMBLY-THROTTLE		1				
323B	WJ00224273	SHAFT ASSEMBLY-THROTTLE		1				
324A	WJ00148542	SLEEVE-CHOKE		1				
324B	WJ00148542	SLEEVE-CHOKE		1				
325A	WJ00136231	WASHER		1				
325B	WJ00136231	WASHER		1				
326A	WJ00224210	SHAFT ASSEMBLY-CHOKE		1				
326B	WJ00224210	SHAFT ASSEMBLY-CHOKE		1				

Please order the parts with part number. Print Date 14/8/2021

Model No.EK7650H POWER CUTTER

รายการ	รหัสอะไหล่	รายละเอียด	การแลกเปลี่ยน	จำนวน	New/Old	ขาย	ซื้อ	ข้อความ
A01	195488-8	TOOL KIT		1	*			
C10	782025-3	TORX WRENCH		1	*			
C20	782236-0	WRENCH 13-16		1	*			
C30	783012-5	SCREWDRIVER		1	*			
C40	831340-3	TOOL BAG		1	*			
A01-1	195488-8	TOOL KIT	O	1				
C10	782025-3	TORX WRENCH		1				
C20	782236-0	WRENCH 13-16		1				
C30	783012-5	SCREWDRIVER		1				
C40	831340-3	TOOL BAG		1				
A02	195532-1	OIL BOTTLE SET		1				
A03	195534-7	WATER SET		1				
C10	123121-2	COUPLING SLEEVE		1				
C20	126068-9	WATER SET PART		1				
C30	266707-0	H.L.SOCKET HEAD BOLT M5X10		1				
C40	452930-5	HOLDER		1				
A04A	195945-6	PRE FILTER SET		1	*			
A04-1A	198172-4	PRE FILTER SET	O	1	*			
A04-1B	198172-4	PRE FILTER SET		1	*			
A04-2	198172-4	PRE FILTER SET	O	1				
A05B	D-56982	LASER DIAMOND WHEEL SEGMENTED		1				
E01	898428-2	CAUTION PLATE		1				
E02	898748-4	CAUTION TAG		1				
E03	898855-3	CAUTION TAG		1				

Please order the parts with part number. Print Date 14/8/2021