Model No.ELM3320 330MM ELECTRIC LAWN MOWER

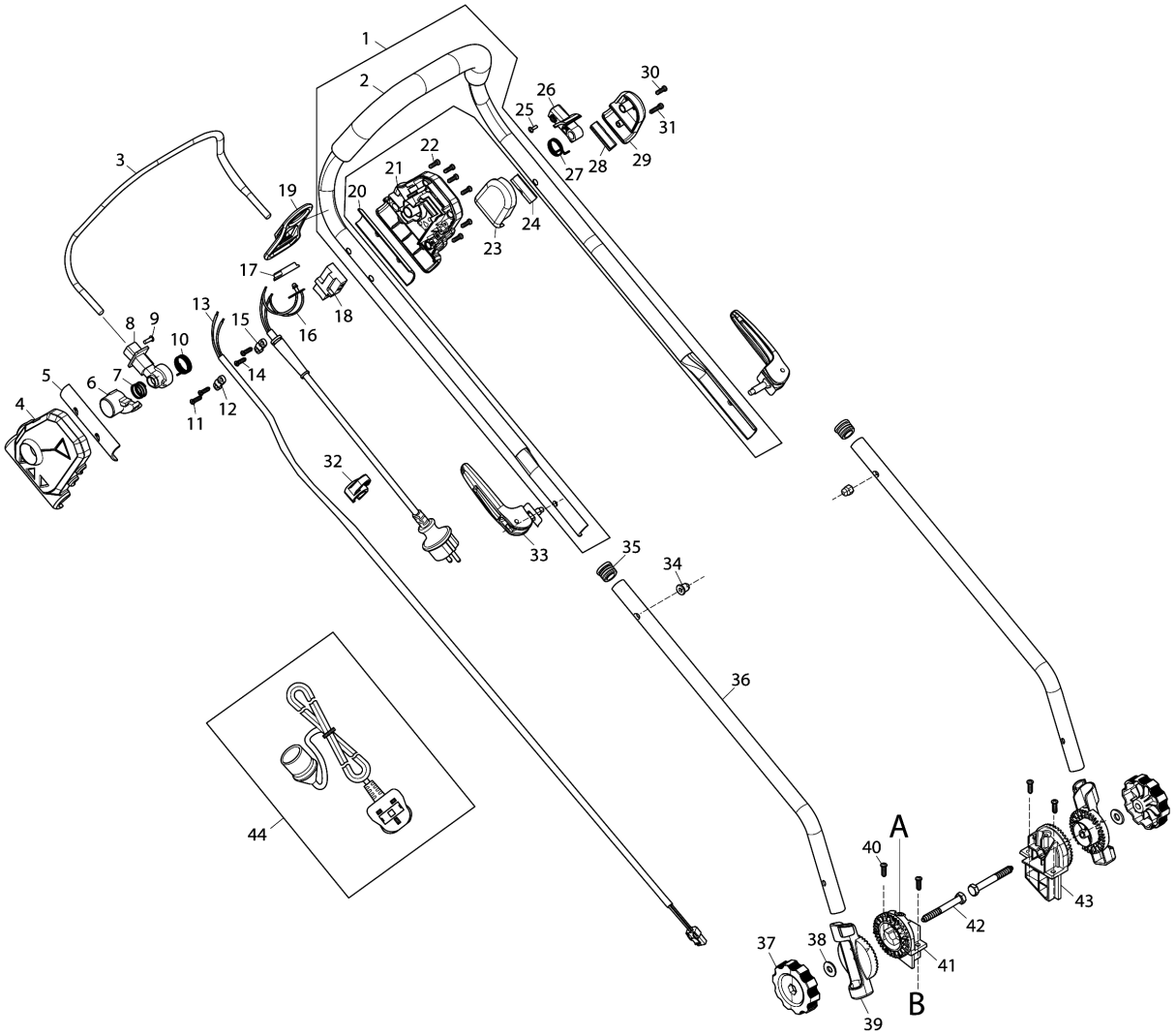

Model No.ELM3320 330MM ELECTRIC LAWN MOWER

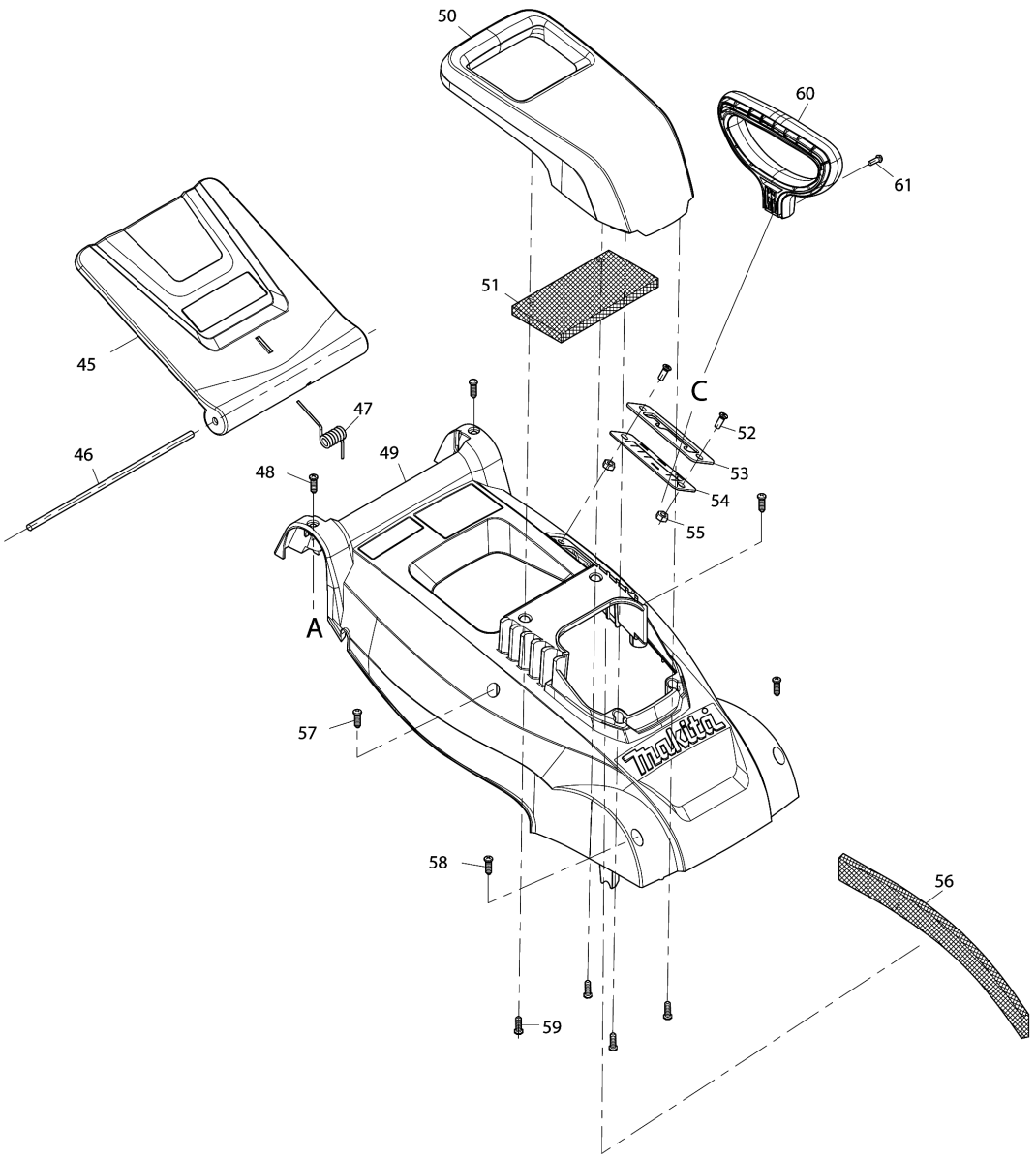

Model No.ELM3320 330MM ELECTRIC LAWN MOWER

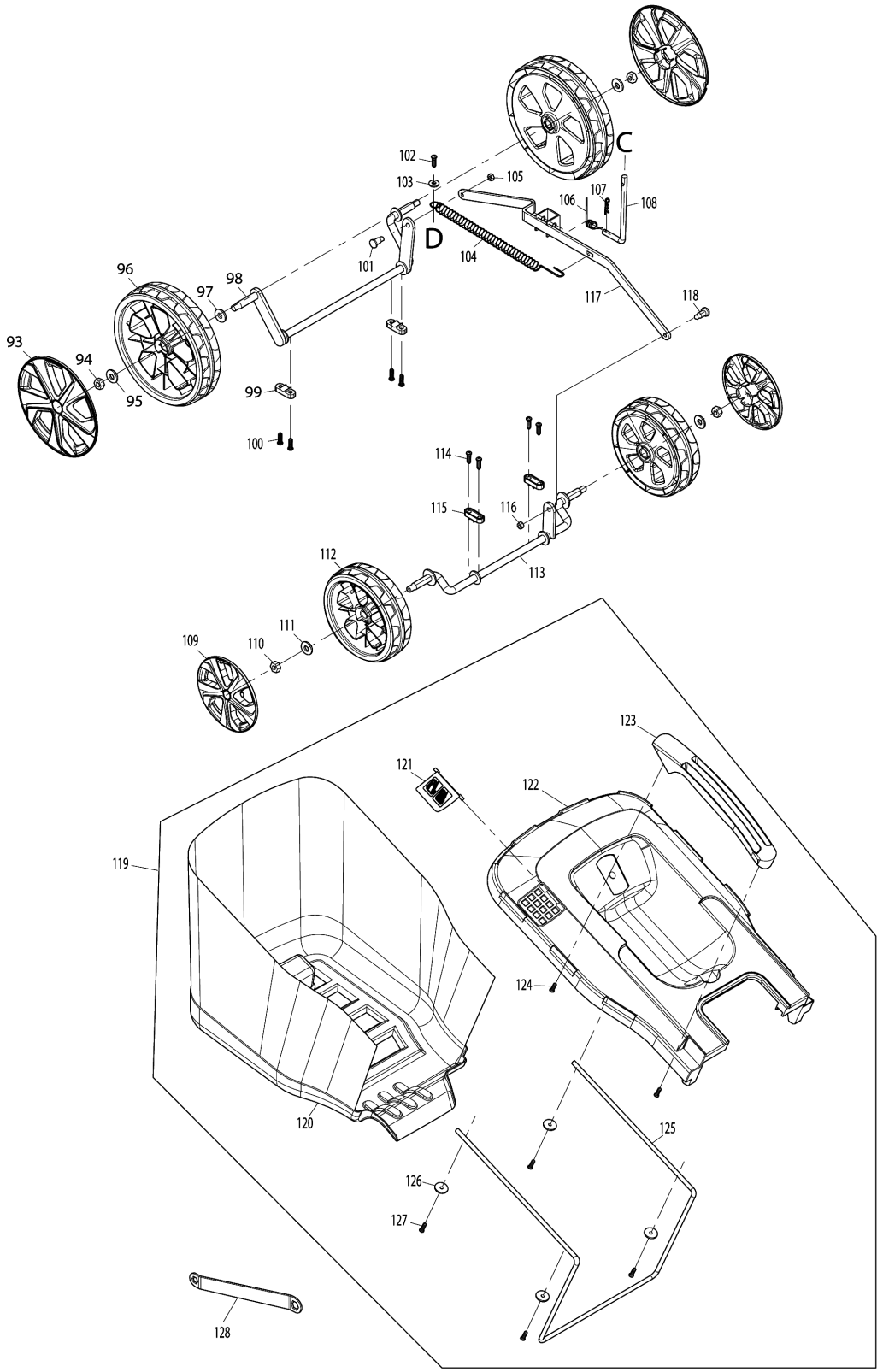

Model No.ELM3320 330MM ELECTRIC LAWN MOWER

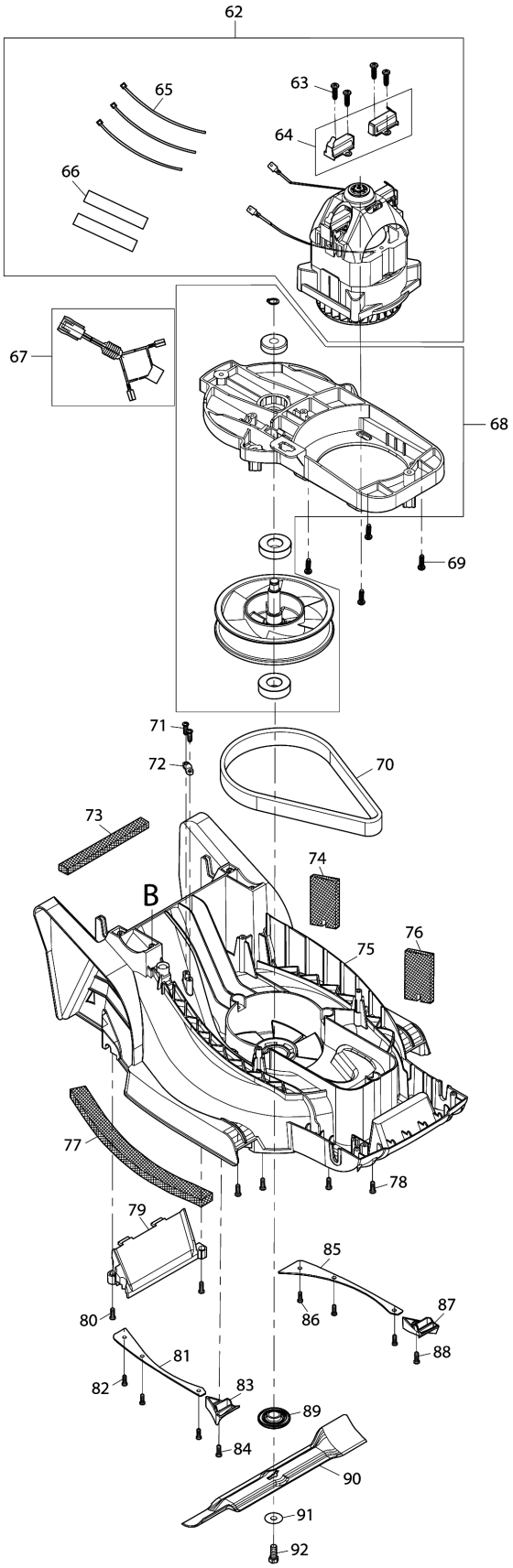

Model No.ELM3320 330MM ELECTRIC LAWN MOWER

รายการ	รหัสอะไหล่	รายละเอียด	การแลกเปลี่ยน	จำนวน	New/Old	ขาย	ซื้อ	ข้อความ
001	YA00000783	UPPER HANDLE BAR ASSY		1				
D10		INC. 2						
002	YA00001163	SPONGE GRIP		1				
003	YA00000784	SWITCH LEVER		1				
004	YA00000765	SWITCH BOX RIGHT		1				
005	YA00000786	SWITCH BOX CLAMP SPASER		1				
006	YA00000766	SWITCH LINK BUTTON		1				
007	YA00000767	COMPRESSION SPRING 16.8		1				
008	YA00000768	SWITCH LEVER END CAP RIGHT		1				
009	652024721	SELF DRILLING SCREW 3.5X10		1				
010	YA00000769	SWITCH TORSION SPRING 21		1				
011	YA00000778	SELF TAPPING SCREW ST4X16		2				
012	YA00000780	CORD CLAMP		1				
013	YA00000771	POWER SUPPLY CORD ASSY		1				
014	YA00000778	SELF TAPPING SCREW ST4X16		2				
015	YA00000780	CORD CLAMP		1				
016	YA00000773	POWER SUPPLY CORD ASSY (EURO)		1				
017	YA00000781	INDICATOR LENZ		1				
018	YA00000772	SWITCH		1				
019	652023811	CABLE HANGER		1				
020	YA00000786	SWITCH BOX CLAMP SPASER		1				
021	YA00000782	SWITCH BOX LEFT		1				
022	YA00000778	SELF TAPPING SCREW ST4X16		6				
023	652023795	SPRING BOX RIGHT		1				
024	YA00000787	LEVER BOX CLAMP SPASER		1				
025	652024721	SELF DRILLING SCREW 3.5X10		1				
026	652023794	SWITCH LEVER END LEFT		1				
027	YA00000737	TORSION SPRING		1				
028	YA00000787	LEVER BOX CLAMP SPASER		1				
029	652023793	SPRING BOX LEFT		1				
030	YA00000778	SELF TAPPING SCREW ST4X16		1				
031	YA00000785	SELF TAPPING SCREW ST4X25		1				
032	YA00000799	CABLE CLIP		1				
033	YA00000801	TENSI0N LEVER ASSY		2				
034	YA00000802	HEX.FRANGE CAP NUT M6		2				
035	YA00001166	PIPE END CAP		2				
036	YA00001167	LOWER HANDLE		2				
037	YA00000803	M8 KNOB		2				

Please order the parts with part number. Print Date 15/8/2021

Model No.ELM3320 330MM ELECTRIC LAWN MOWER

รายการ	รหัสอะไหล่	รายละเอียด	การแลกเปลี่ยน	จำนวน	New/Old	ขาย	ซื้อ	ข้อความ
038	YA00000420	WASHER		2				
039	YA00000804	ANGLE ADJUSTMENT JOINT UPPER		2				
040	YA00000806	SELF TAPPING SCREW ST5X20		4				
041	YA00000805	ANGLE ADJUSTMENT JOINT LOWER R		1				
042	YA00000807	HEX BOLT M8X65		2				
043	YA00000808	ANGLE ADJUSTMENT JOINT LOWER L		1				
045	YA00000832	REAR FLAP BULE		1				
046	YA00000830	REAR FLAP HINGE ROD		1				
047	YA00000831	REAR FLAP TORSION SPRING 7.7		1				
048	YA00000821	SELF TAPPING SCREW ST4X16		2				
049	YA00000838	HOUSING ASSY BULE		1				
050	YA00000834	TOP COVER		1				
051	YA00000841	SPONGE CUSHION		1				
052	YA00000398	SUNK SCREW 5*14		2				
053	YA00000835	HEIGHT ADJUSTER STOP PLATE		1				
054	YA00000836	STOP PLATE RUBBER SHEET		1				
055	YA00000837	NYLON INSERT HEX LOCK NUT M5		2				
056	YA00000840	SPONGE CUSHION		1				
057	YA00000821	SELF TAPPING SCREW ST4X16		2				
058	YA00000821	SELF TAPPING SCREW ST4X16		2				
059	YA00000820	SELF TAPPING SCREW ST5X16		4				
060	YA00000848	HIGHT ADJUST GRIP		1				
061	YA00000849	PAN HEAD SCREW M4X10		1				
062	YA00001164	MOTOR ASSY (230V)		1				
D10		INC. 63-66						
063	YA00000813	SELF TAPPING SCREW ST4X10		4				
064	YA00000814	CARBON BRUSH 2PICS SET		1				
065	YA00001174	CABLE TIE		3				
066	YA00001173	HEAT SHRINKABLE TUBE		2				
067	YA00001172	LEAD WIRE SET		1				
068	YA00001169	MOTOR FLAME & PULLEY ASSY		1				
069	YA00000806	SELF TAPPING SCREW ST5X20		4				
070	YA00001168	POLY LIBBED BELT		1				
071	YA00000821	SELF TAPPING SCREW ST4X16		2				
072	YA00000780	CORD CLAMP		1				

Please order the parts with part number. Print Date 15/8/2021

Model No.ELM3320 330MM ELECTRIC LAWN MOWER

รายการ	รหัสอะไหล่	รายละเอียด	การแลกเปลี่ยน	จำนวน	New/Old	ขาย	ซื้อ	ข้อความ
073	YA00000857	SPONGE CUSHION		1				
074	YA00000819	SPONGE CUSHION		1				
075	YA00000818	DECK		1				
076	YA00000819	SPONGE CUSHION		1				
077	YA00000841	SPONGE CUSHION		1				
078	YA00000806	SELF TAPPING SCREW ST5X20		4				
079	YA00000822	GRASS INTAKE UNDER PLATE		1				
080	YA00000820	SELF TAPPING SCREW ST5X16		2				
081	YA00000823	UNDER BRACE RIGHT		1				
082	YA00000820	SELF TAPPING SCREW ST5X16		3				
083	YA00000824	AIR INTAKE BOARD RIGHT		1				
084	YA00000820	SELF TAPPING SCREW ST5X16		1				
085	YA00000846	UNDER BRACE LEFT		1				
086	YA00000820	SELF TAPPING SCREW ST5X16		3				
087	YA00000847	AIR INTAKE BOARD LEFT		1				
088	YA00000820	SELF TAPPING SCREW ST5X16		1				
089	YA00000825	INNER FLANGE 45		1				
090	YA00000731	BLADE 33		1	*			
090-1	YA00000745	BLADE 330 SET	O	1				
091	YA00000826	CLAMP WASHER 8		1				
092	YA00000827	HEX. BOLT M8X25		1				
093	YA00000809	WHEEL CAP 6 INCH		2				
094	652023843	NYLON INSERT HEX. LOCK NUT M8		2				
095	YA00000420	WASHER		2				
096	YA00000810	WHEEL 7INCH		2				
097	YA00000856	SPEASER WASHER 10		1				
098	YA00000812	REAR AXLE		1				
099	YA00000811	AXLE RETAINER		2				
100	YA00000820	SELF TAPPING SCREW ST5X16		4				
101	YA00000843	STEPPED HEX BOLT M6X16		1				
102	YA00000820	SELF TAPPING SCREW ST5X16		1				
103	YA00000845	WASHER 5		1				
104	YA00000844	TENSION SPRING 11		1				
105	YA00000627	SELF-LOCKING NUTS M6		1				
106	YA00000852	TORSION SPRING 8		1				
107	YA00000851	R PIN 7		1				
108	YA00000850	HIGHT ADJUST LEVER		1				

Please order the parts with part number. Print Date 15/8/2021

Model No.ELM3320 330MM ELECTRIC LAWN MOWER

รายการ	รหัสอะไหล่	รายละเอียด	การแลกเปลี่ยน	จำนวน	New/Old	ขาย	ซื้อ	ข้อความ
109	YA00000853	WHEEL CAP 4.5 INCH		2				
110	652023843	NYLON INSERT HEX. LOCK NUT M8		2				
111	YA00000420	WASHER		2				
112	YA00000854	WHEEL 5.5INCH		2				
113	YA00000855	FRONT AXLE		1				
114	YA00000820	SELF TAPPING SCREW ST5X16		4				
115	YA00000811	AXLE RETAINER		2				
116	YA00000627	SELF-LOCKING NUTS M6		1				
117	YA00000842	CONNECTING ROD		1				
118	YA00000843	STEPPED HEX BOLT M6X16		1				
119	YA00001156	GRASS BOX ASSY(MAKITA)		1				
D10		INC. 120-127						
120	YA00000789	GRASS CATCH SIDE CLOSS SET MAK		1				
121	YA00000791	GRASS CATCHER INDICATOR BLUE		1				
122	YA00000793	GRASS CATCHER UPPER BORAD		1				
123	YA00000795	GRIP		1				
124	YA00000794	SELF TAPPING SCREW ST4X14		2				
125	YA00000797	GRASS CATCHER FRAME		1				
126	YA00000796	WASHER 4		4				
127	YA00000794	SELF TAPPING SCREW ST4X14		4				
128	YA00000798	SPANNER 10-13		1				

Please order the parts with part number. Print Date 15/8/2021