Model No.GA011G 100MM CORDLESS ANGLE GRINDER

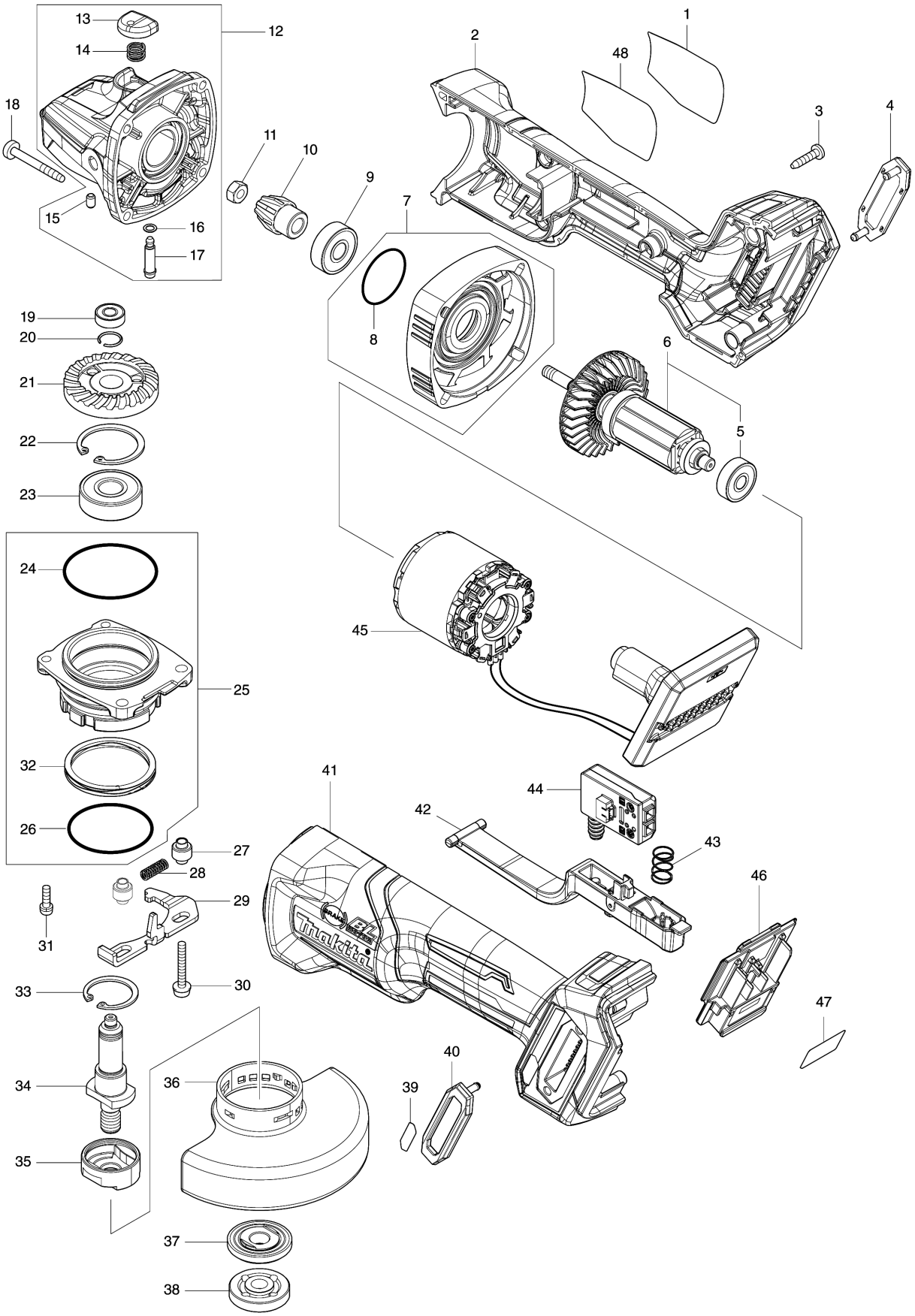

Model No.GA011G 100MM CORDLESS ANGLE GRINDER

รายการ	รหัสอะไหล่	รายละเอียด	การแลกเปลี่ยน	จำนวน	New/Old	ขาย	ซื้อ	ข้อความ
001	8008U5-3	CLEAR LABEL		1				
002	183P29-8	MOTOR HOUSING SET		1				
C10	263005-3	RUBBER PIN 6		2				
D10		INC. 41						
003	266326-2	TAPPING SCREW 4X18		5				
004	422563-0	DUST COVER		1				
005	210023-2	BALL BEARING 627DDW		1				
006	519595-7	ROTOR ASS'Y		1				
D10		INC. 5						
007	136190-4	GEAR HOUSING COVER ASS'Y		1				
D10		INC. 8						
008	213445-5	O-RING 26		1				
009	210042-8	BALL BEARING 629LLB		1				
010	226976-5	SPIRAL BEVEL GEAR 10		1				
011	252186-8	HEX. NUT M6		1				
012	136198-8	GEAR HOUSING ASS'Y		1				
D10		INC. 13-17						
013	412234-7	PIN CAP		1				
014	233072-2	COMPRESSION SPRING 8		1				
015	263002-9	RUBBER PIN 4		1				
016	213960-9	O RING 5		1				
017	256546-6	SHOULDER PIN 4		1				
018	266048-4	TAPPING SCREW 4X40		4				
019	210006-2	BALL BEARING 696ZZ		1				
020	233950-6	RING SPRING 11		1				
021	226862-0	SPIRAL BEVEL GEAR 37		1				
022	962151-6	RETAINING RING R-32		1				
023	211129-9	BALL BEARING 6201DDW		1				
024	213622-9	O RING 45		1				
025	136262-5	BEARING BOX ASS'Y		1				
D10		INC. 24,26,32						
026	213510-0	O RING 36		1				
027	327322-6	SLEEVE 4		2				
028	232490-1	COMPRESSION SPRING 4		1				
029	347641-4	LEVER B		1				
030	911159-7	PAN HEAD SCREW M4X30		2				
031	911138-5	P.H.SCREW M4X20 WITH WR		2				
032	232542-8	SCROW WAVE SPRING 41		1				
033	962105-3	RETAINING RING R-26		1				
034	326669-5	SPINDLE		1				

Model No.GA011G 100MM CORDLESS ANGLE GRINDER

รายการ	รหัสอะไหล่	รายละเอียด	การแลกเปลี่ยน	จำนวน	New/Old	ขาย	ซื้อ	ข้อความ
035	310516-0	LEAD FLANGE B		1				
036	347478-9	WHEEL COVER 100		1				
037	224483-2	INNER FLANGE 30		1				
038	224559-5	LOCK NUT 10-30		1				
039	8007R2-2	XGT LOGO LABEL		1				
040	422563-0	DUST COVER		1				
041	183P29-8	MOTOR HOUSING SET		1				
C10	263005-3	RUBBER PIN 6		2				
D10		INC. 2						
042	140T33-4	SWITCH LEVER COMPLETE		1				
043	233263-5	COMPRESSION SPRING 9		1				
044	651083-9	SWITCH C3XA-1PSPM		1				
045	629480-7	STATOR COMPLETE		1				
046	632P65-6	TERMINAL UNIT		1				
047	856Y14-5	GA011G SERIAL NO. LABEL		1				
048	856Y11-1	GA011G NAME PLATE		1				
A01	158237-4	GRIP 36 COMPLETE		1				
A02	A-80852	GRINDING WHEEL 100X6X16		1				
A03	782420-7	LOCK NUT WRENCH 20		1				
A04B	412393-7	BATTERY COVER		2				
A04C	412393-7	BATTERY COVER		2				
A05B	***DC40RA	DC40RA FAST CHARGER		1				
D10		COMPO-PARTS						
A05C	***DC40RA	DC40RA FAST CHARGER		1				
D10		COMPO-PARTS						
A06B	191B42-8	BATTERY BL4025 SET		2				
A06C	191B32-1	BATTERY BL4040 SET		2				
A07B	821552-6	CONNECTOR PLASTIC CASE (TYPE4)		1				
C10	453974-8	LATCH		4				
A07C	821552-6	CONNECTOR PLASTIC CASE (TYPE4)		1				
C10	453974-8	LATCH		4				
A08B	8013L1-1	GA011GD201 INDICATION LABEL		1				
A08C	8013L3-7	GA011GM201 INDICATION LABEL		1				
A09B	8013L2-9	GA011GD201 PLASTIC CASE LABEL		2				
A09C	8013L4-5	GA011GM201 PLASTIC CASE LABEL		2				
A10B	835E79-0	INNER TRAY		1				
A10C	835E79-0	INNER TRAY		1				

Please order the parts with part number.

Print Date 24/8/2021