Model No.PM7650H PETROL MIST BLOWER

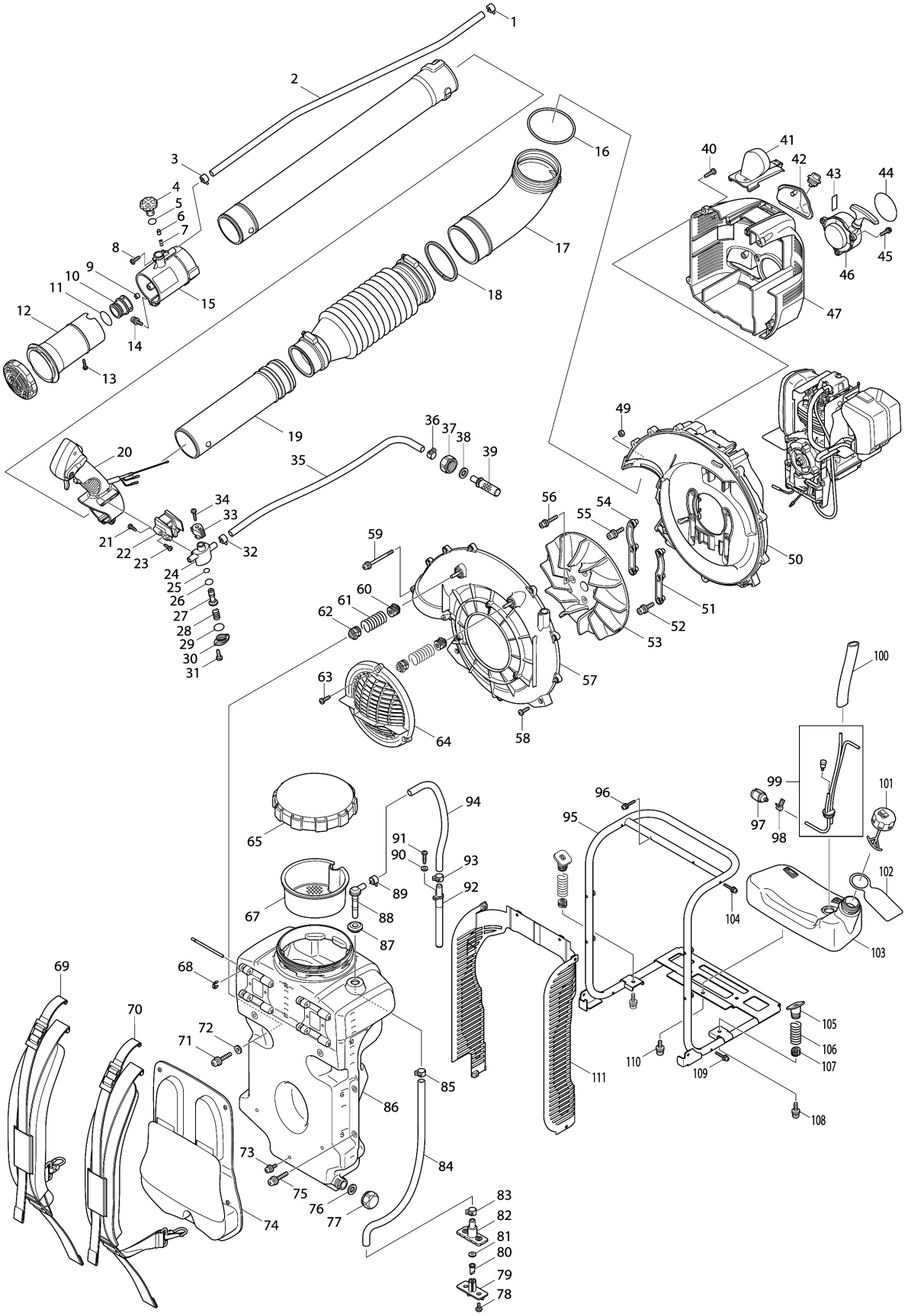

Model No.PM7650H PETROL MIST BLOWER

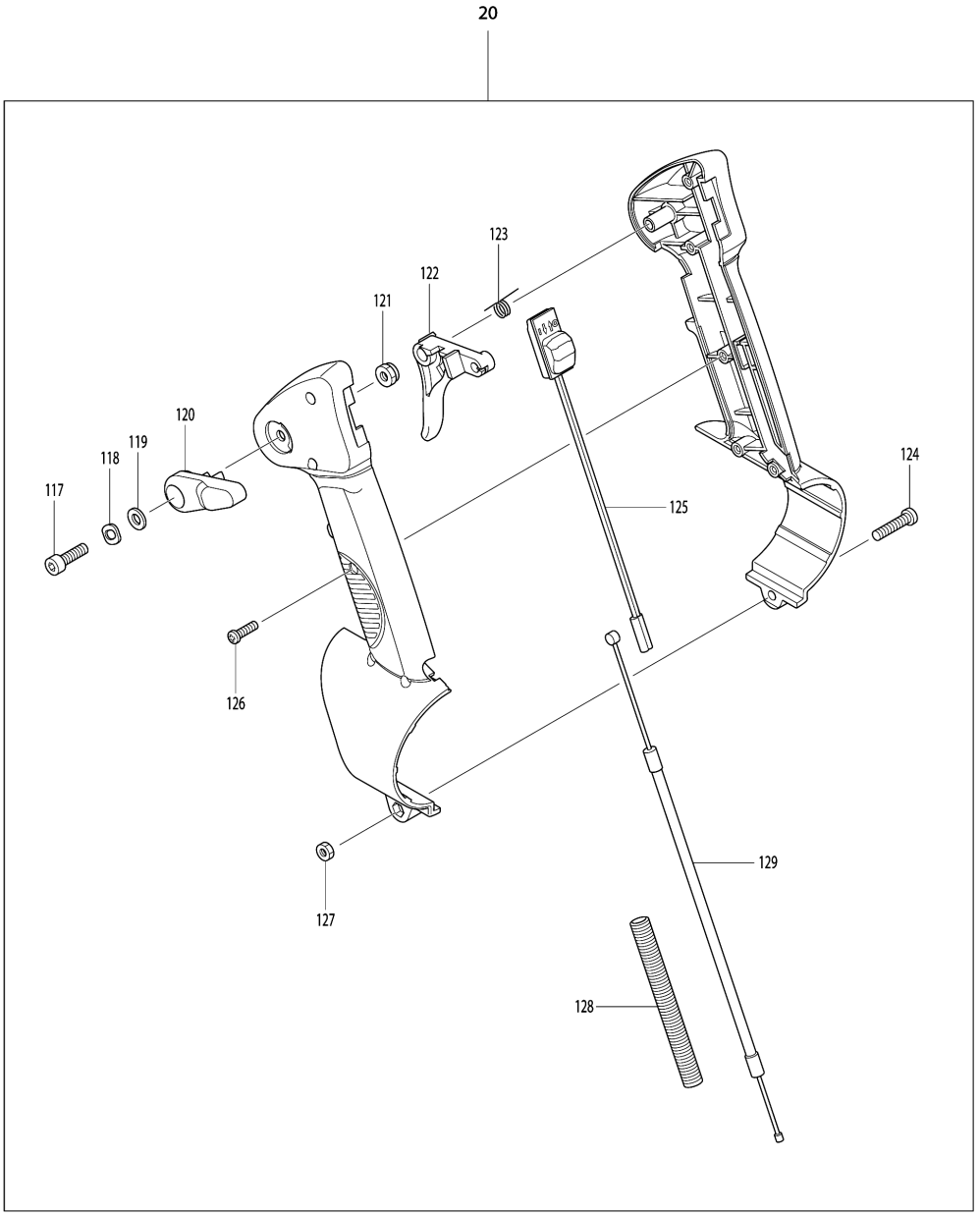

Model No.PM7650H PETROL MIST BLOWER

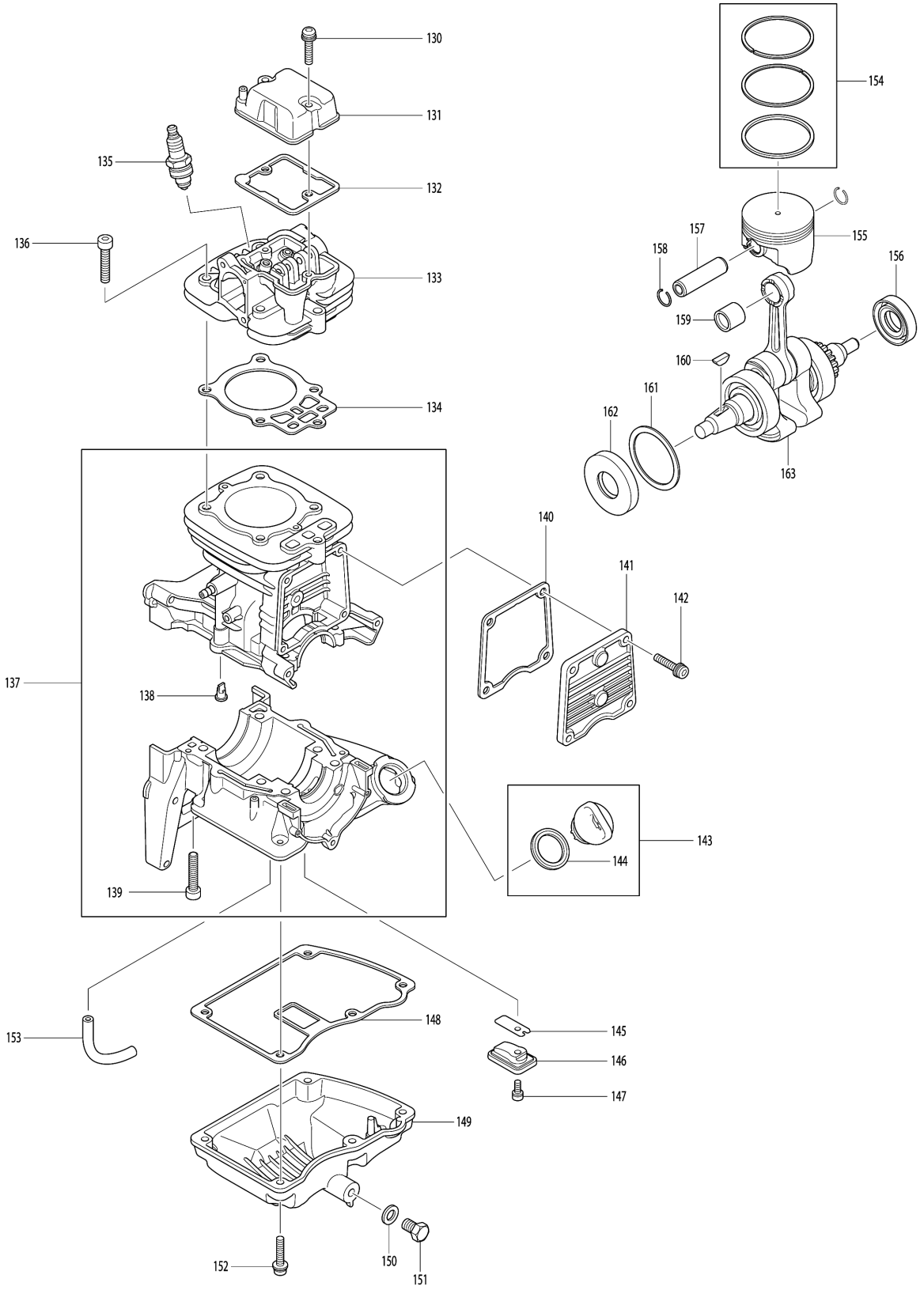

Model No.PM7650H PETROL MIST BLOWER

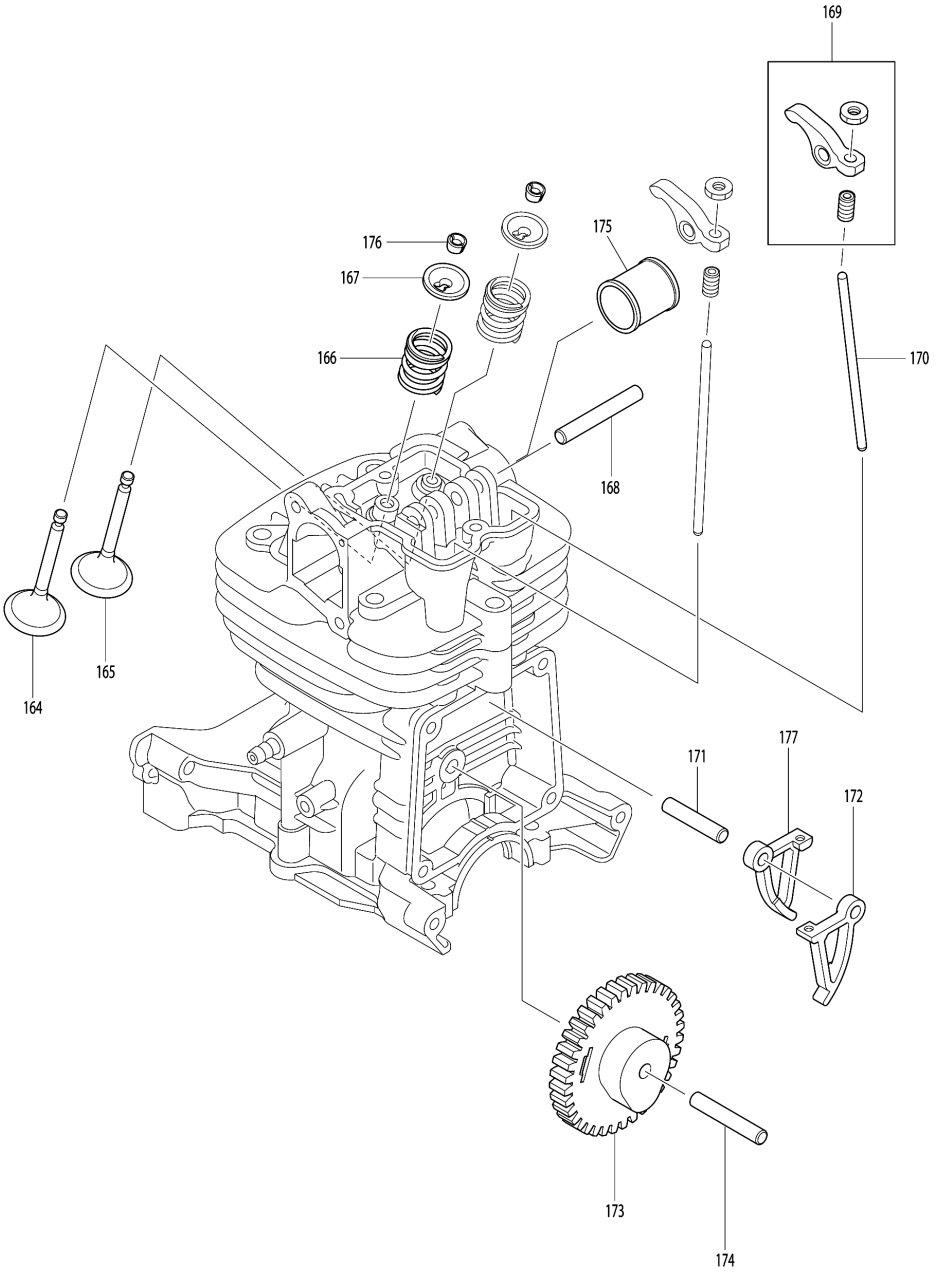

Model No.PM7650H PETROL MIST BLOWER

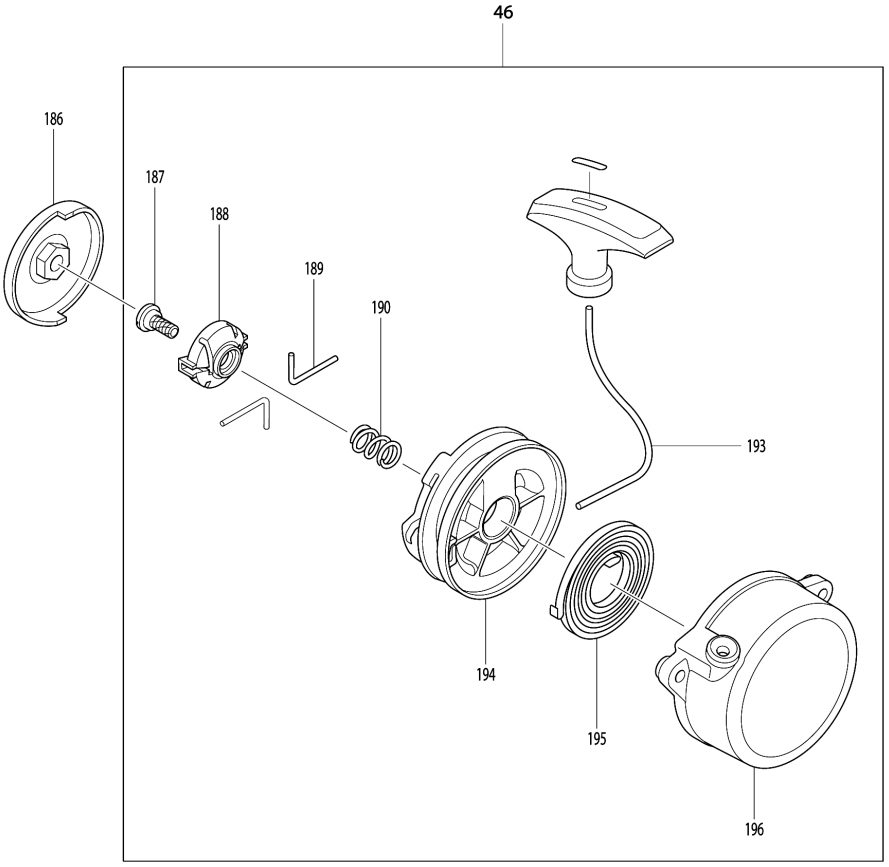

Model No.PM7650H PETROL MIST BLOWER

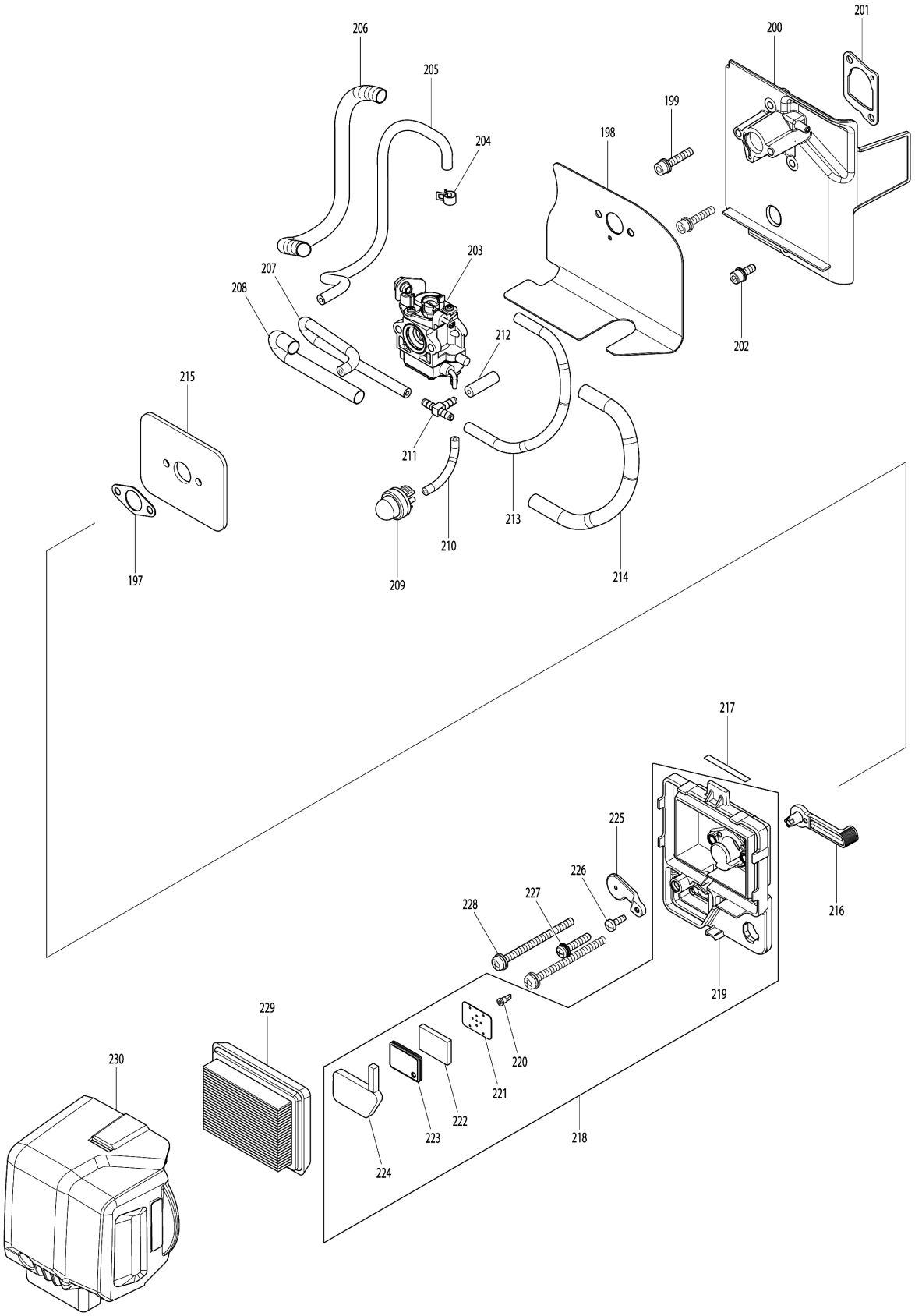

Model No.PM7650H PETROL MIST BLOWER

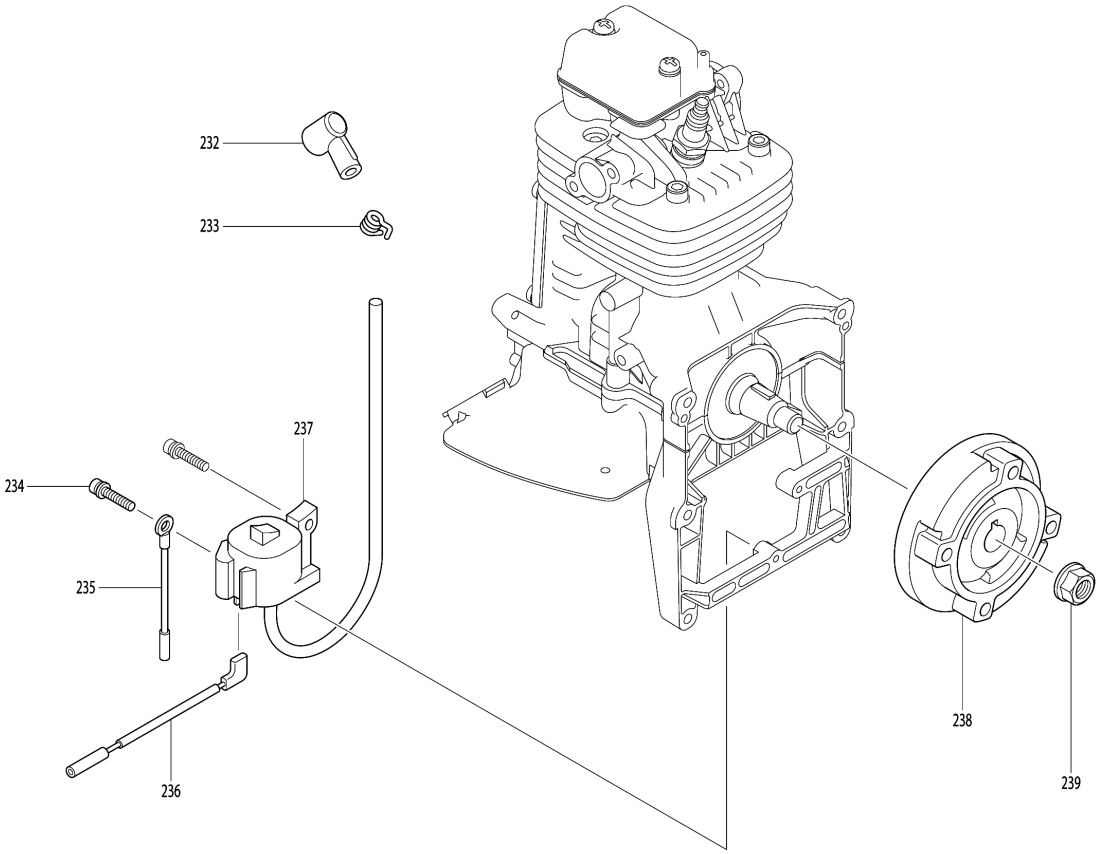

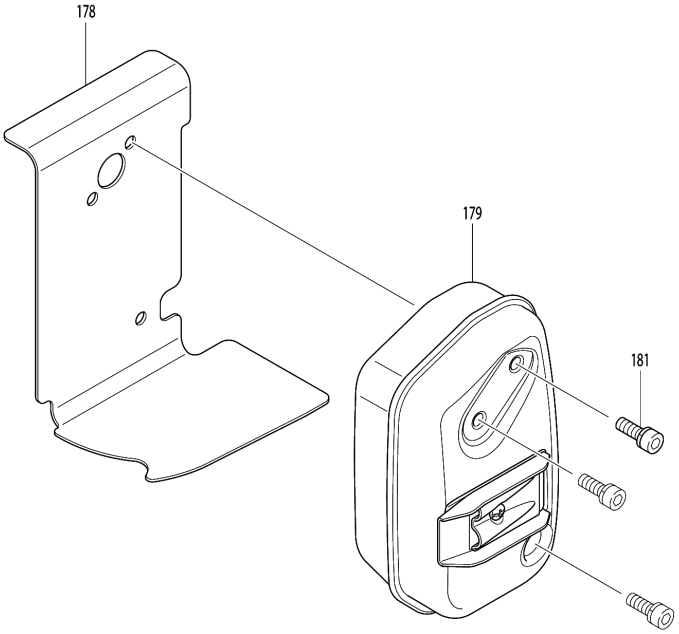

Model No.PM7650H PETROL MIST BLOWER

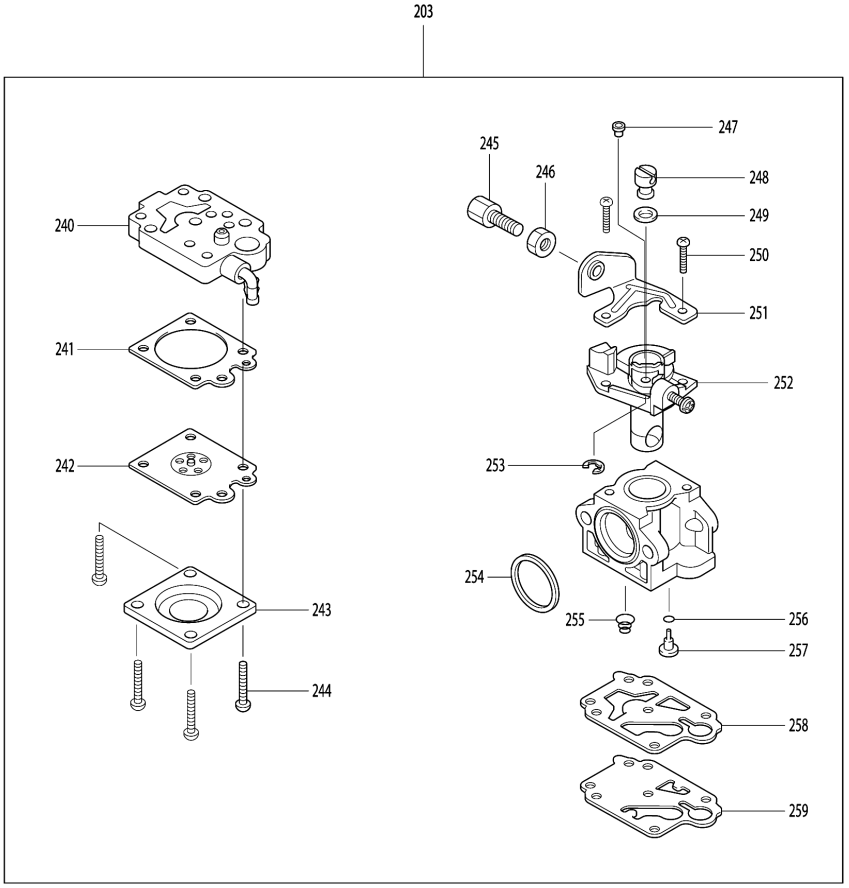

Model No.PM7650H PETROL MIST BLOWER

รายการ	รหัสอะไหล่	รายละเอียด	การแลกเปลี่ยน	จำนวน	New/Old	ขาย	ซื้อ	ข้อความ
001	282023-2	HOSE CLAMP 14		1				
002A	412110-5	TUBE 10-750		1	*			
002-1A	456184-6	TUBE 10-550	S	1				
002-1B	456184-6	TUBE 10-550		1				
003	282023-2	HOSE CLAMP 14		1				
004	453505-3	NOZZLE CAP		1				
005	213686-3	O-RING 12		1				
006	268288-0	PIN 5.5		1				
007	234244-2	COMPRESSION SPRING 3		1				
008	266007-8	TAPPING SCREW BIND PT 3X10		1				
009A	326198-8	NOZZLE 4.5		1				
009B	326378-6	NOZZLE 0.5		1				
010	453599-8	SLEEVE 25		1				
011	213437-4	O RING 28		1				
012A	453986-1	TOP ADAPTER		1	*			
012B	455663-1	TOP ADAPTER		1	*			
012-1A	140T54-6	TOP ADAPTER COMPLETE	<	1				
012-1B	140T58-8	TOP ADAPTER COMPLETE	<	1				
C10	898344-8	CAUTION LABEL		1				
013	266045-0	TAPPING SCREW 4X20		1				
014	911228-4	PAN HEAD SCREW M5X18		1				
015	141921-8	NOZZLE ADAPTER COMPLETE		1				
016A	213645-7	O RING 93		1	*			
016-1A	213645-7	O RING 93	O	1				
016-1B	213645-7	O RING 93		1				
017	412116-3	ELBOW		1				
018	453714-4	WIRE BAND		1				
019	168746-5	SWIVEL PIPE COMPLETE		1				
020A	126137-6	CONTROL LEVER ASSEMBLY		1	*			
D10		INC. 117-129			*			
020-1A	197095-3	CONTROL LEVER SET	O	1	*			
D10		INC. 117-129			*			
020-2A	198218-6	CONTROL LEVER SET	O	1				
D10		INC. 117-129						
020-2B	198218-6	CONTROL LEVER SET		1				
D10		INC. 117-129						
021A	266192-7	TAPPING SCREW 4X14		2	*			
022A	141522-2	BODY HOLDER COMPLETE		1	*			
C10	898351-1	INDICATION LABEL		1	*			
023A	266192-7	TAPPING SCREW 4X14		2	*			

Please order the parts with part number. Print Date 14/8/2021

Model No.PM7650H PETROL MIST BLOWER

รายการ	รหัสอะไหล่	รายละเอียด	การแลกเปลี่ยน	จำนวน	New/Old	ขาย	ซื้อ	ข้อความ
024A	453508-7	COCK BODY		1	*			
024-1A	126580-9	COCK ASSEMBLY	S	1	*			
C10	455656-8	COCK BODY		1	*			
C20	213647-3	O-RING 9		1	*			
C30	455655-0	COCK		1	*			
C40	455657-6	COCK LEVER		1	*			
C50	266326-2	TAPPING SCREW 4X18		1	*			
024-2A	123852-3	COCK ASSEMBLY	O	1	*			
C10	455656-8	COCK BODY		1	*			
C20	213647-3	O-RING 9		1	*			
C30	455655-0	COCK		1	*			
C41	457249-7	COCK LEVER	O	1	*			
C50	266326-2	TAPPING SCREW 4X18		1	*			
024-3A	123981-2	COCK ASSEMBLY	<	1				
C10	455656-8	COCK BODY		1				
C20	213647-3	O-RING 9		1				
C31	457674-2	COCK	S	1				
C42	457675-0	COCK LEVER	S	1				
C50	266326-2	TAPPING SCREW 4X18		1				
024-3B	123981-2	COCK ASSEMBLY		1				
C10	455656-8	COCK BODY		1				
C20	213647-3	O-RING 9		1				
C31	457674-2	COCK		1				
C42	457675-0	COCK LEVER		1				
C50	266326-2	TAPPING SCREW 4X18		1				
025A	213647-3	O-RING 9		1	*			
026A	213686-3	O-RING 12		1	*			
027A	453510-0	VALVE ROD		1	*			
028A	234245-0	COMPRESSION SPRING 12		1	*			
029A	213649-9	O-RING 18		1	*			
029-1A	213649-9	O-RING 18	O	1	*			
030A	453509-5	BODY COVER		1	*			
031A	266192-7	TAPPING SCREW 4X14		2	*			
032	282023-2	HOSE CLAMP 14		1				
033A	453511-8	PUSH BUTTON		1	*			
034A	266130-9	TAPPING SCREW BIND PT 3X16		1	*			
035	412110-5	TUBE 10-750		1				
036	282023-2	HOSE CLAMP 14		1				
037	453616-4	CAP HOSE		1				
038A	423434-4	BLIND PACKING		1	*			

Please order the parts with part number. Print Date 14/8/2021

Model No.PM7650H PETROL MIST BLOWER

รายการ	รหัสอะไหล่	รายละเอียด	การแลกเปลี่ยน	จำนวน	New/Old	ขาย	ซื้อ	ข้อความ
038-1A	424760-4	BLIND PACKING	O	1				
038-1B	424760-4	BLIND PACKING		1				
039	453559-0	JOINT STRAINER		1				
040	266420-0	TAPPING SCREW 5X20		4				
041	450964-2	PLUG COVER		1				
042	424504-2	OIL GUARD		1				
043	897623-1	SERIAL NO. LABEL		1				
044A	898353-7	PM7650H MODEL NO. LABEL		1				
044B	898353-7	PM7650H MODEL NO. LABEL		1	*			
044-1B	817G29-9	PM7650HRX MODEL NO. LABEL	<	1				
045	911233-1	PAN HEAD SCREW M5X20		3				
046	126165-1	RECOIL		1				
D10		INC. 187-190,193-196			*			
D11		INC. 187-190,193-196,261,262						
D11		INC. 187-190,193-196,261,262						
047A	141521-4	ENGINE COVER COMPLETE		1				
C20	443193-4	INSULATION LABEL D		1				
047B	144670-6	ENGINE COVER COMPLETE		1				
C20	443193-4	INSULATION LABEL D		1				
C10	898343-0	CAUTION LABEL		1				
049	931202-6	HEX. NUT M5		2				
050	453558-2	VOLUTE CASE 2		1				
051	318891-8	BASE R		1				
052	922353-6	HEX.SOCKET HEAD BOLT M6X30		3				
053	240138-1	IMPELLER		1				
054	318890-0	BASE L		1				
055	922353-6	HEX.SOCKET HEAD BOLT M6X30		3				
056A	922363-3	H.S.H.BOLT M6X40 WITH WR		4	*			
056-1A	266828-8	H.S.H.BOLT M6X40 WITH WR	<	4				
056-1B	266828-8	H.S.H.BOLT M6X40 WITH WR		4				
057A	453491-8	VOLUTE CASE 1		1	*			
057-1A	454669-6	VOLUTE CASE 1	<	1				
057-1B	454669-6	VOLUTE CASE 1		1				
058	266420-0	TAPPING SCREW 5X20		9				
059	911288-6	PAN HEAD SCREW M5X65		2				
060	453561-3	TANK HOLDER		2				
061	234247-6	COMPRESSION SPRING 20		2				
062	453561-3	TANK HOLDER		2				
063	266420-0	TAPPING SCREW 5X20		3				

Please order the parts with part number. Print Date 14/8/2021

Model No.PM7650H PETROL MIST BLOWER

รายการ	รหัสอะไหล่	รายละเอียด	การแลกเปลี่ยน	จำนวน	New/Old	ขาย	ซื้อ	ข้อความ
064A	453497-6	FAN GUARD		1	*			
064-1A	454670-1	FAN GUARD	S	1				
064-1B	454670-1	FAN GUARD		1				
065A	141764-8	TANK CAP COMPLETE		1				
065B	143034-1	TANK CAP COMPLETE		1				
067A	453493-4	TANK STRAINER		1	*			
067-1A	455784-9	TANK STRAINER	S	1				
067-1B	455784-9	TANK STRAINER		1				
068	961011-9	STOP RING E-4		4				
069A	166109-9	BAND R		1	*			
069-1A	166121-9	BAND R	<	1	*			
069-2A	166143-9	BAND R	<	1	*			
069-3A	161510-3	BAND R	<	1				
069-3B	161747-2	BAND R MR		1				
070A	166108-1	BAND L		1	*			
070-1A	166120-1	BAND L	<	1	*			
070-2A	166142-1	BAND L	<	1	*			
070-3A	161509-8	BAND L	<	1				
070-3B	161746-4	BAND L MR		1				
071	911353-1	PAN HEAD SCREW M6X30		2				
072	253804-1	FLAT WASHER 6		2				
073	911213-7	PAN HEAD SCREW M5X12		5				
074A	166107-3	CUSHION		1	*			
074-1A	166144-7	CUSHION	<	1	*			
074-2A	161566-6	CUSHION	<	1				
074-2B	161566-6	CUSHION		1				
075	911353-1	PAN HEAD SCREW M6X30		4				
076A	423434-4	BLIND PACKING		1	*			
076-1A	424760-4	BLIND PACKING	O	1				
076-1B	424760-4	BLIND PACKING		1				
077	453615-6	CAP		1				
078	266767-2	PAN HEAD SCREW M5X12		2				
079	453496-8	MIXING BODY LOWER		1				
080	424492-3	CHECK VALVE		1				
081	267462-7	FLAT WASHER 10		1				
082	453495-0	MIXING BODY UPPER		1				
083	282023-2	HOSE CLAMP 14		1				
084	412109-0	TUBE 10-500		1				
085	282023-2	HOSE CLAMP 14		1				
086A	141523-0	TANK COMPLETE		1	*			

Please order the parts with part number. Print Date 14/8/2021

Model No.PM7650H PETROL MIST BLOWER

รายการ	รหัสอะไหล่	รายละเอียด	การแลกเปลี่ยน	จำนวน	New/Old	ขาย	ซื้อ	ข้อความ
C10	898344-8	CAUTION LABEL		1	*			
086-1A	142370-2	TANK COMPLETE	<	1	*			
C10	898344-8	CAUTION LABEL		1	*			
086-2A	143198-1	TANK COMPLETE	S	1	*			
C10	898344-8	CAUTION LABEL		1	*			
086-2B	143198-1	TANK COMPLETE		1	*			
C10	898344-8	CAUTION LABEL		1	*			
086-3	455935-4	TANK	>	1				
087	424503-4	GROMMET		1				
088A	453494-2	JOINT 1		1	*			
088-1A	454683-2	JOINT 1	S	1				
088-1B	454683-2	JOINT 1		1				
089	282023-2	HOSE CLAMP 14		1				
090	253874-0	FLAT WASHER 4		1				
091	265995-6	TAPPING SCREW 4X18		1				
092	453498-4	PRESSURE PIPE		1				
093	282023-2	HOSE CLAMP 14		1				
094	412108-2	TUBE 10-300		1				
095	165686-8	FRAME COMPLETE		1				
096	911148-2	PAN HEAD SCREW M4X25		2				
097	163532-9	FILTER		1				
098	345920-4	HOSE CLAMP		1				
099	126138-4	FUEL TUBE ASSEMBLY		1				
100	412119-7	TUBE GUARD 20-160		1				
101	125472-9	FUEL TANK CAP ASSEMBLY		1	*			
101-1	127108-6	FUEL TANK CAP ASSEMBLY	O	1				
102	810455-9	CAUTION PLATE		1				
103	453618-0	FUEL TANK		1				
104	911148-2	PAN HEAD SCREW M4X25		2				
105	453499-2	FRAME HOLDER		2				
106	234246-8	COMPRESSION SPRING 17		2				
107	453560-5	LOWER FRAME HOLDER		2				
108	911333-7	PAN HEAD SCREW M6X20		2				
109	911148-2	PAN HEAD SCREW M4X25		2				
110	911313-3	PAN HEAD SCREW M6X12 WITH WR		3				
111A	453600-9	GUARD		1	*			
111-1A	454684-0	GUARD	<	1				
111-1B	454684-0	GUARD		1				
117	922317-0	HEX. SOCKET HEAD BOLT M6X14		1				
118	267841-9	WAVE WASHER 7		1				

Please order the parts with part number. Print Date 14/8/2021

Model No.PM7650H PETROL MIST BLOWER

รายการ	รหัสอะไหล่	รายละเอียด	การแลกเปลี่ยน	จำนวน	New/Old	ขาย	ซื้อ	ข้อความ
119	267459-6	FLAT WASHER 7		1				
120	453717-8	LEVER 2 THROTTLE		1				
121	931302-2	HEX. NUT M6		1				
122	453716-0	LEVER 1 THROTTLE		1				
123	233602-9	TORSION SPRING 9		1				
124	911242-0	PAN HEAD SCREW M5X25		1				
125	168745-7	SWITCH COMPLETE		1				
126	266768-0	TAPPING SCREW 4X16		5				
127A	931202-6	HEX. NUT M5		1	*			
127-1A	252103-8	HEX. LOCK NUT M5-8	X	1				
127-1B	252103-8	HEX. LOCK NUT M5-8		1				
128	453715-2	TUBE CABLE		1				
129	168744-9	CONTROL CABLE		1				
130A	266789-2	H.S.H.BOLT M5X30 WITH WR		2	*			
130-1A	922253-0	H.S.H.BOLT M5X30 WITH WR	O	2				
130-1B	922253-0	H.S.H.BOLT M5X30 WITH WR		2				
131	141771-1	ROCKER COVER COMPLETE		1				
132	5971500900	ROCKER COVER GASKET		1				
133A	5971003002	CYLINDER HEAD COMPL		1	*			
D10		INC. 168,169			*			
133-1A	142381-7	CYLINDER HEAD COMPLETE	<	1	*			
D10		INC. 168,169			*			
133-2A	142771-4	CYLINDER HEAD COMPLETE	<	1	*			
D10		INC. 168,169			*			
133-2B	142771-4	CYLINDER HEAD COMPLETE		1	*			
D10		INC. 168,169			*			
133-3	126943-9	CYLINDER HEAD ASSEMBLY	O	1				
134	442167-2	CYLINDER HEAD GASKET		1				
135	168401-9	SPARK PLUG		1				
136A	0119069670	SOCKET HEAD BOLT M6X35		5	*			
136-1A	922357-8	HEX. SOCKET HEAD BOLT M6X35	O	5				
136-1B	922357-8	HEX. SOCKET HEAD BOLT M6X35		5				
137A	5971007001	CYLINDER BLOCK SET		1	*			
D10		INC. 138,139			*			
137-1A	197786-6	CYLINDER BLOCK SET	S	1	*			
D10		INC. 138,139			*			
137-2A	123580-0	ENGINE BLOCK ASSY(FOR SERVICE)	<	1				
C10	197786-6	CYLINDER BLOCK SET		1	*			
C11	135739-7	CYLINDER BLOCK ASS'Y	O	1				

Please order the parts with part number. Print Date 14/8/2021

Model No.PM7650H PETROL MIST BLOWER

รายการ	รหัสอะไหล่	รายละเอียด	การแลกเปลี่ยน	จำนวน	New/Old	ขาย	ซื้อ	ข้อความ
D10		INC. 130-134,136,140-159						
D20		INC. 161-167,170,172-174						
D30		INC. 176,177						
137-2B	123580-0	ENGINE BLOCK ASSY(FOR SERVICE)		1				
C11	135739-7	CYLINDER BLOCK ASS'Y		1				
D10		INC. 130-134,136,140-159						
D20		INC. 161-167,170,172-174						
D30		INC. 176,177						
138	424201-0	CHECK VALVE		2				
139A	0119069930	HEX. SOCKET HEAD BOLT M6X30		6	*			
139-1A	922352-8	HEX. SOCKET HEAD BOLT M6X30	O	6				
139-1B	922352-8	HEX. SOCKET HEAD BOLT M6X30		6				
140	442168-0	CAM GEAR GASKET		1				
141	318725-5	CAM GEAR COVER		1				
142A	0119059531	SOCKET HEAD BOLT M5X16(W,SW)		4	*			
142-1A	266813-1	H.S.H.BOLT M5X16 WITH WR	O	4	*			
142-2A	922223-9	H.S.H.BOLT M5X16 WITH WR	O	4				
142-2B	922223-9	H.S.H.BOLT M5X16 WITH WR		4				
143	6676005000	OIL CAP ASSY		1				
D10		INC. 144						
144	0213229980	GASKET		1				
145	346083-9	LEAD VALVE		1				
146	5931501300	RETAINER PLATE		1				
147	0119049980	SOCKET HEAD BOLT M4X10		1	*			
147-1	922117-8	HEX. SOCKET HEAD BOLT M4X12	O	1				
148	5976500100	OIL CASE GASKET		1				
149A	5976500000	OIL CASE		1	*			
149-1A	319008-6	OIL CASE	O	1				
149-1B	319008-6	OIL CASE		1				
150A	0037008000	ALUMINUM GASKET		1	*			
150-1A	346452-4	GASKET	O	1				
150-1B	346452-4	GASKET		1				
151A	0016608120	BOLT M8X12		1	*			
151-1A	266916-1	HEX. BOLT M8X12	O	1	*			
151-2A	921412-3	HEX. BOLT M8X12	<	1				
151-2B	921412-3	HEX. BOLT M8X12		1				
152A	0119059390	SOCKET HEAD BOLT M5X25		5	*			
152-1A	922243-3	HEX. SOCKET HEAD BOLT M5X25	O	5				

Please order the parts with part number. Print Date 14/8/2021

Model No.PM7650H PETROL MIST BLOWER

รายการ	รหัสอะไหล่	รายละเอียด	การแลกเปลี่ยน	จำนวน	New/Old	ขาย	ซื้อ	ข้อความ
152-1B	922243-3	HEX. SOCKET HEAD BOLT M5X25		5				
153	0851109960	TUBE		1	*			
153-1	422420-2	TUBE3-80	<	1				
154A	5972003000	PISTON RING SET		1	*			
154-1A	197040-8	PISTON RING SET	<	1				
154-1B	197040-8	PISTON RING SET		1				
155A	318726-3	PISTON		1	*			
155-1A	197456-7	PISTON SET	<	1				
C10	318726-3	PISTON		1				
D10		INC. 154,158						
155-1B	197456-7	PISTON SET		1				
C10	318726-3	PISTON		1				
D10		INC. 154,158						
156A	213599-8	OIL SEAL 17		1	*			
156-1A	213599-8	OIL SEAL 17	O	1	*			
156-1B	213599-8	OIL SEAL 17		1	*			
156-2	213091-4	OIL SEAL 17	<	1				
157A	5802500702	PISTON PIN		1	*			
157-1A	257344-1	PISTON PIN	O	1	*			
157-1B	257344-1	PISTON PIN		1	*			
157-2	326039-8	PISTON PIN	O	1				
158	233995-4	RING SPRING 12		2				
159	0610129940	NEEDLE ROLLER BEARING		1				
160	0323049950	WOODRUFF KEY		1				
161	267448-1	FLAT WASHER 41		1				
162	213598-0	OIL SEAL(L)		1	*			
162-1	213090-6	OIL SEAL(L)	<	1				
163A	5972002002	CRANKSHAFT COMPL		1	*			
163-1A	142205-7	CRANK SHAFT COMPLETE	O	1	*			
163-2A	126576-0	CRANK SHAFT ASSEMBLY	O	1				
163-2B	126576-0	CRANK SHAFT ASSEMBLY		1				
164	331964-0	INTAKE VALVE		1				
165	331965-8	EXHAUST VALVE		1				
166	234212-5	COMPRESSION SPRING 11		2				
167	331966-6	RETAINER		2				
168A	5973500501	SHAFT ROCKER ARM		1	*			
168-1A	268310-3	PIN 5	O	1	*			
169A	126005-3	ROCKER ARM ASSEMBLY		2	*			
170	256526-2	PUSH ROD		2				
171A	5973500700	SHAFT CAM LIFTER		1	*			

Please order the parts with part number. Print Date 14/8/2021

Model No.PM7650H PETROL MIST BLOWER

รายการ	รหัสอะไหล่	รายละเอียด	การแลกเปลี่ยน	จำนวน	New/Old	ขาย	ซื้อ	ข้อความ
171-1A	256186-0	PIN 5	O	1	*			
172A	59735006K1	CAM LIFTER		1	*			
172-1A	313266-6	CAM LIFTER L	<	1	*			
172-2A	310715-4	CAM LIFTER L	S	1				
172-2B	310715-4	CAM LIFTER L		1				
173	5973002002	CAMGEAR ASSY		1	*			
173-1	126622-9	CAMGEAR ASSEMBLY	<	1				
174	256200-2	PIN 5		1				
175	331937-3	EXHAUST PORT SPACER		1				
176	331967-4	COTTER		4				
177A	5973502300	CAM LIFTER		1	*			
177-1A	313267-4	CAM LIFTER R	<	1				
177-1B	313267-4	CAM LIFTER R		1				
178A	5973501301	MUFFLER GASKET		1	*			
178-1A	5973501302	MUFFLER GASKET	O	1	*			
178-2A	346682-7	MUFFLER GASKET	O	1				
178-2B	346682-7	MUFFLER GASKET		1				
179A	5973001003	MUFFLER EXHAUST		1	*			
179-1A	168807-1	EXHAUST MUFFLER	O	1				
179-1B	168807-1	EXHAUST MUFFLER		1				
181	266771-1	SOCKET HEAD BOLT M6X18		3				
186	5975500000	PULLEY		1	*			
186-1	161599-1	PULLEY	O	1				
187	266585-8	TAPPING SCREW 5X12		1				
188	424516-5	COLLAR		1				
189	326200-7	SWING ARM		2				
190	234257-3	FRICTION SPRING		1				
193A	126186-3	ROPE ASSEMBLY		1	*			
193-1A	444043-6	STARTER ROPE	S	1				
193-1B	444043-6	STARTER ROPE		1				
194	441075-4	REEL		1				
195	232262-4	SPIRAL SPRING		1	*			
195-1	SG00000014	SPIRAL SPRING	O	1				
196	141649-8	STARTER CASE COMPLETE		1				
197	5233504200	CARBURETOR GASKET		1				
198	423438-6	CARBURETOR GASKET		1				
199	266749-4	HEX. S.H.B. M5X25 WITH WR		2				
200	141670-7	INSULATOR COMPL		1				
201	162333-2	INSULATOR GASKET		1				
202	0119059490	SOCKET HEAD BOLT M5X14 (W,SW)		1				

Please order the parts with part number. Print Date 14/8/2021

Model No.PM7650H PETROL MIST BLOWER

รายการ	รหัสอะไหล่	รายละเอียด	การแลกเปลี่ยน	จำนวน	New/Old	ขาย	ซื้อ	ข้อความ
203	168725-3	CARBURETOR		1				
D10		INC. 240-246,248-251,253-259						
204	282027-4	HOSE CLAMP 6		1				
205	412134-1	TUBE 3-210		1				
206	454190-5	CORRUGATE TUBE 160		1				
207	412121-0	TUBE 3-130		1				
208	412123-6	TUBE 10-110		1				
209	168398-2	PRIMER PUMP		1				
210	412112-1	TUBE 3-60		1				
211	452952-5	HOSE JOINT		1				
212	422096-5	TUBE 3-25		1				
213	412122-8	TUBE 3-240		1				
214	412124-4	TUBE 10-220		1				
215	346582-1	PLATE 31		1				
216	453502-9	CHOKE LEVER		1	*			
216-1	458165-6	CHOKE LEVER	S	1				
217A	898347-2	SERIAL NO. LABEL		1	*			
217-1A	814P65-0	SERIAL NO. LABEL	<	1				
217-1B	814P65-0	SERIAL NO. LABEL		1				
218	126149-9	CLEANER PLATE ASSEMBLY		1				
D10		INC. 219-224						
219	453501-1	AIR CLEANER PLATE		1				
220	424316-3	CHECK VALVE		1				
221	162325-1	SEPARATOR GASKET		1				
222	352013-0	SEPARATOR NET		1				
223	162322-7	SEPARATOR STOPPER		1				
224	162324-3	SEPARATOR PLATE		1				
225	5973501700	CHOKE PLATE		1	*			
225-1	458166-4	CHOKE PLATE	<	1				
226	266427-6	TAPPING SCREW 4X12		1				
227	911243-8	PAN HEAD SCREW M5X25		1				
228	911293-3	PAN HEAD SCREW M5X70		2				
229	442181-8	AIR CLEANER ELEMENT		1	*			
229-1	442181-8	AIR CLEANER ELEMENT	O	1				
230	141525-6	AIR CLEANER COVER COMPLETE		1				
C10	898350-3	INDICATION LABEL		1				
232	424105-6	PLUG CAP		1				
233	324891-8	PLUG CAP SPRING		1				
234	0119049970	SOCKET HEAD BOLT M4X20		2	*			
234-1	922138-0	H.S.H.BOLT M4X20 WITH WR	O	2				

Please order the parts with part number. Print Date 14/8/2021

Model No.PM7650H PETROL MIST BLOWER

รายการ	รหัสอะไหล่	รายละเอียด	การแลกเปลี่ยน	จำนวน	New/Old	ขาย	ซื้อ	ข้อความ
235	638784-6	WIRE		1				
236	638710-5	LEAD WIRE		1				
237	5977001010	IGNITION COIL		1	*			
237-1	161837-1	IGNITION COIL	O	1				
238A	5977001020	FLYWHEEL COMPL		1	*			
238-1A	319170-7	FLYWHEEL	O	1				
238-1B	319170-7	FLYWHEEL		1				
239	264054-3	FLANGE NUT M10		1				
240	141672-3	PUMP BODY ASSEMBLY		1				
241	442183-4	METERING DIAPHRAGM GASKET		1				
242	168620-7	METERING DIAPHRAGM		1				
243A	346608-9	METER DIAPHRAGM COVER		1	*			
243-1A	WJ00021158	METERING DIAPHRAGM COVER	O	1				
243-1B	WJ00021158	METERING DIAPHRAGM COVER		1				
244A	266770-3	SCREW		4	*			
244-1A	WJ00096325	SCREW	O	4				
244-1B	WJ00096325	SCREW		4				
245	266795-7	ADJUST SCREW		1				
246	264065-8	CABLE ADJUST NUT M6		1				
248	325922-6	SWIVEL		1				
249	413140-9	WASHER		1				
250	266704-6	PAN HEAD SCREW M3X10		2				
251	346491-4	BRACKET CABLE		1				
253	257964-1	STOP RING E-3		1				
254	424444-4	PACKING RING		1				
255	234183-6	CONICAL COMPRESSION SPRING 5-9		1				
256	213538-8	O RING 2		1				
257	326243-9	JET		1				
258	442155-9	PUMP GASKET		1				
259A	168575-6	PUMP DIAPHRAGM		1	*			
259-1A	WJ00009599	PUMP DIAPHRAGM	O	1				
259-1B	WJ00009599	PUMP DIAPHRAGM		1				
260	195926-0	O RING SET		1				
D10		INC. 5,25,26,29						
261A	424361-8	STARTER KNOB	S	1				
261B	424361-8	STARTER KNOB		1				
262A	424360-0	ROPE STOPPER	S	1				
262B	424360-0	ROPE STOPPER		1				
263A	423467-9	SPONGE 12	S	1				

Please order the parts with part number. Print Date 14/8/2021

Model No.PM7650H PETROL MIST BLOWER

รายการ	รหัสอะไหล่	รายละเอียด	การแลกเปลี่ยน	จำนวน	New/Old	ขาย	ซื้อ	ข้อความ
263B	423467-9	SPONGE 12		1				
264A	135600-8	CYLINDER HEAD ASS'Y 76CC		1	*			
D10		INC. 133,164-167,176			*			
264-1A	135619-7	CYLINDER HEAD ASS'Y 76CC	<	1				
D10		INC. 133,164-167,176						
264-1B	135619-7	CYLINDER HEAD ASS'Y 76CC		1				
D10		INC. 133,164-167,176						
A01	163319-9	HAND STRAP		1				
A02	782237-8	BOX WRENCH		1				
A03	783019-1	DRIVER		1				
A04A	282024-0	HOSE CLAMP 76		3	*			
A04-1A	282024-0	HOSE CLAMP 76	O	4				
A04-1B	282024-0	HOSE CLAMP 76		4				
A05	282025-8	HOSE CLAMP 100		1				
A06A	453700-5	STRAIGHT PIPE 380		1	*			
A06-1A	453700-5	STRAIGHT PIPE 380	O	1				
A06-1B	453700-5	STRAIGHT PIPE 380		1				
A07	412115-5	FLEXIBLE PIPE		1				
A08A	453506-1	DIFFUSION COVER		1				
A09	453507-9	BENT PIPE 630		1				
A10	453699-4	STRAIGHT PIPE 630		1				
A11A	412109-0	TUBE 10-500		1	*			
A11-1A	412108-2	TUBE 10-300	<	1				
A11-1B	412108-2	TUBE 10-300		1				
A12A	196733-4	BAND 25 SET		1	*			
A12B	196733-4	BAND 25 SET		1	*			
A12-1	196733-4	BAND 25 SET	O	1				
A13B	196140-1	ACCESSORY SET		1				
B01	197056-3	HOSE CLAMP SET		1				
D10		INC. A04,A05						
E01	819432-8	CAUTION TAG		1				

Please order the parts with part number. Print Date 14/8/2021