Model No.TEY1201 PETROL CHAIN SAW

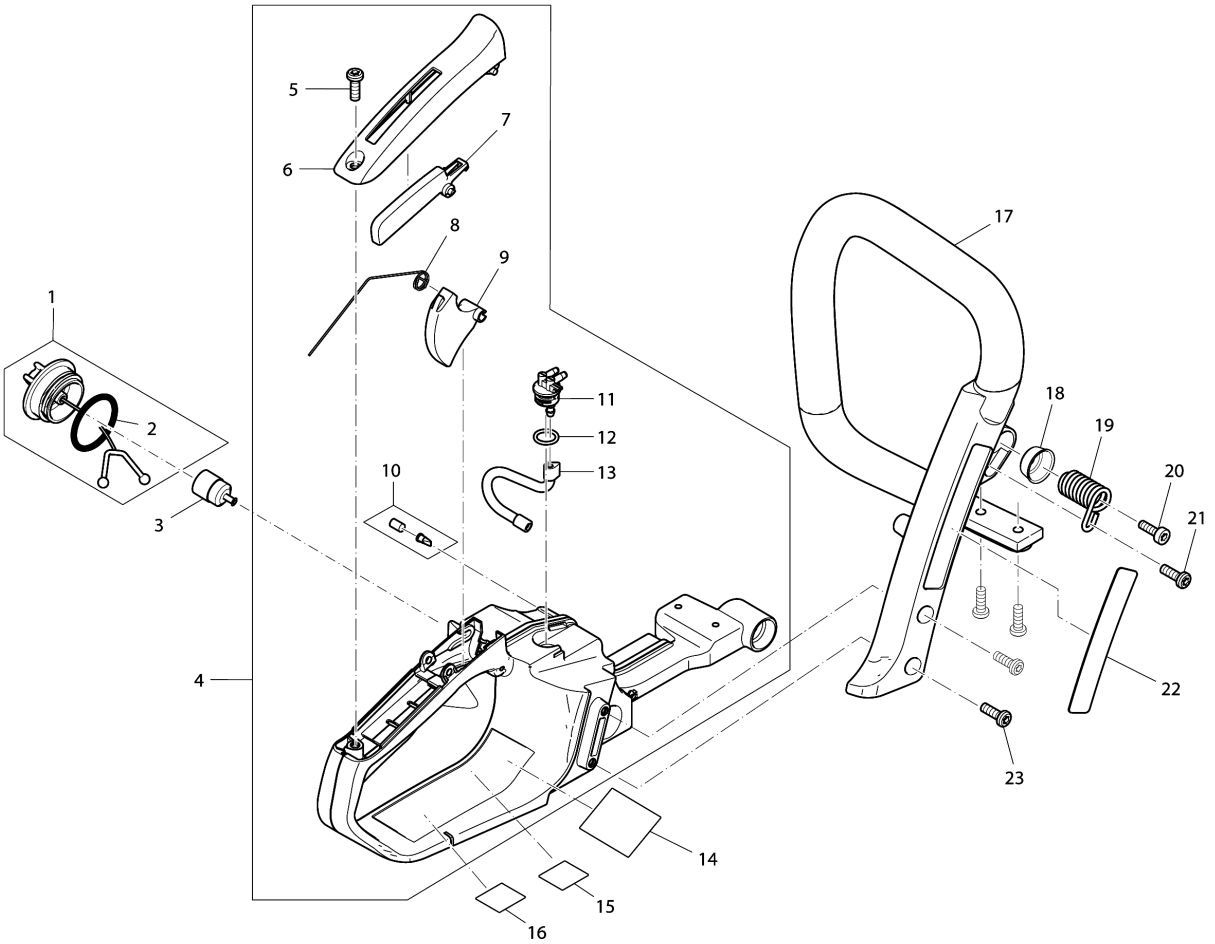

Model No.TEY1201 PETROL CHAIN SAW

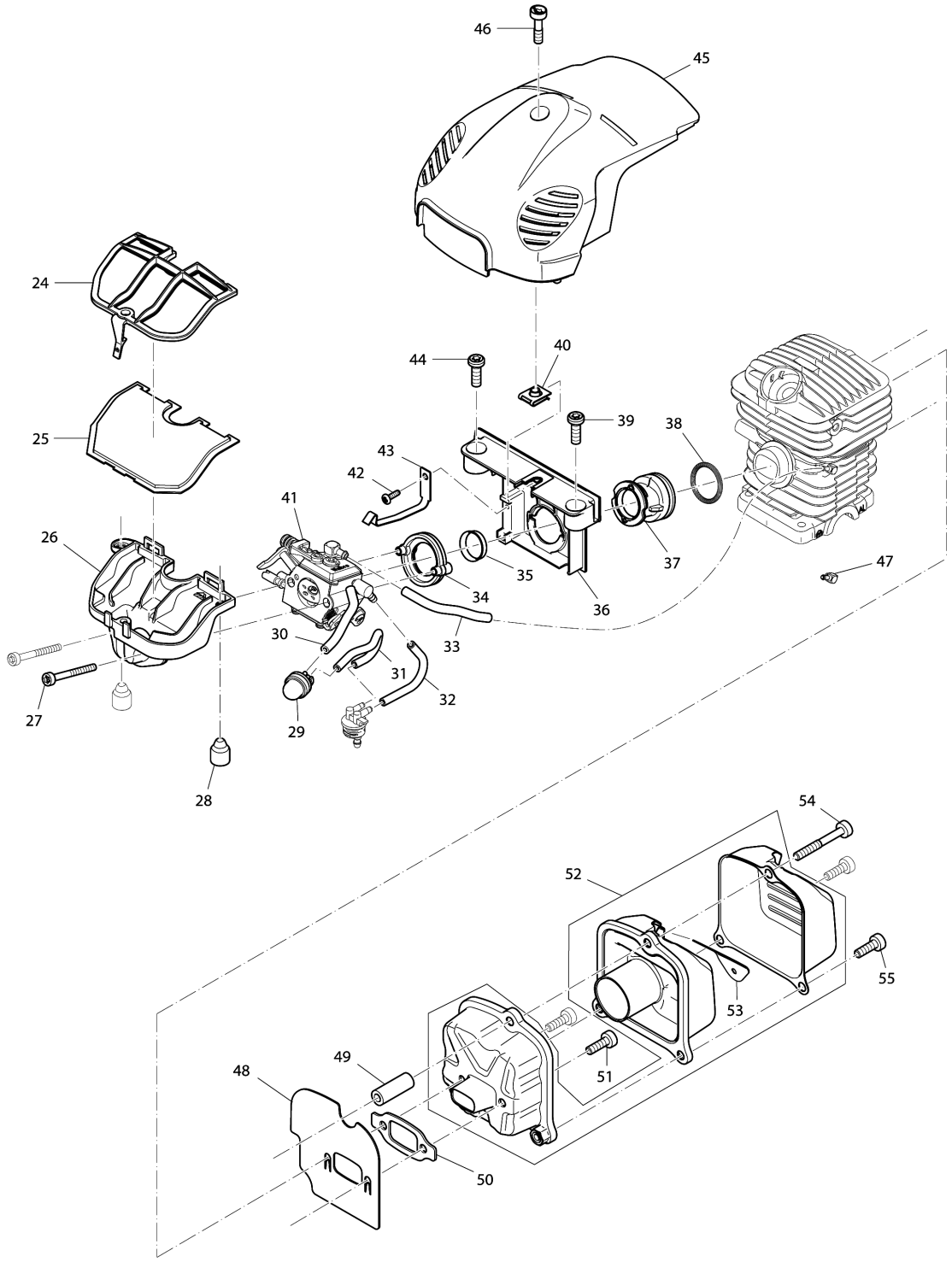

Model No.TEY1201 PETROL CHAIN SAW

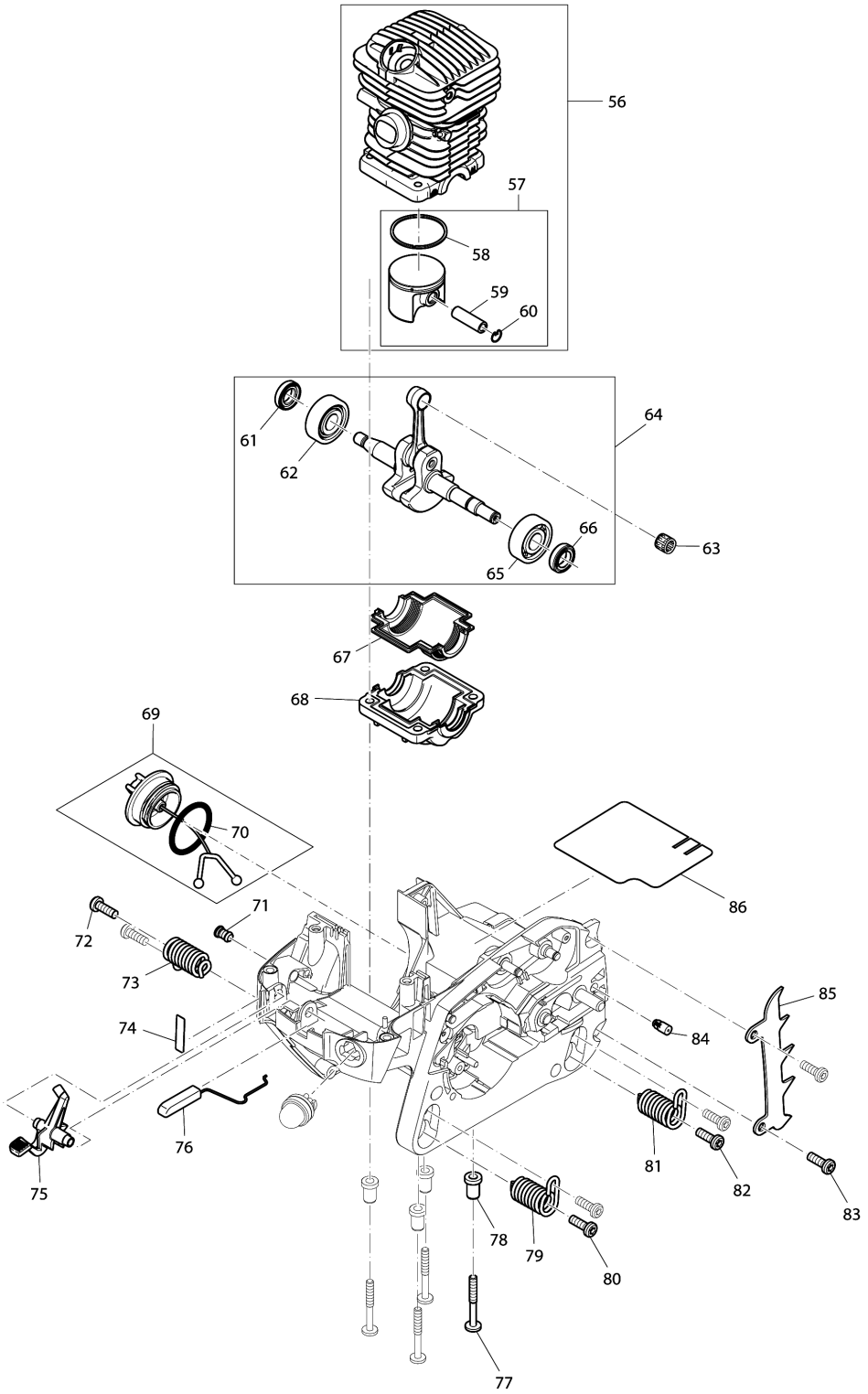

Model No.TEY1201 PETROL CHAIN SAW

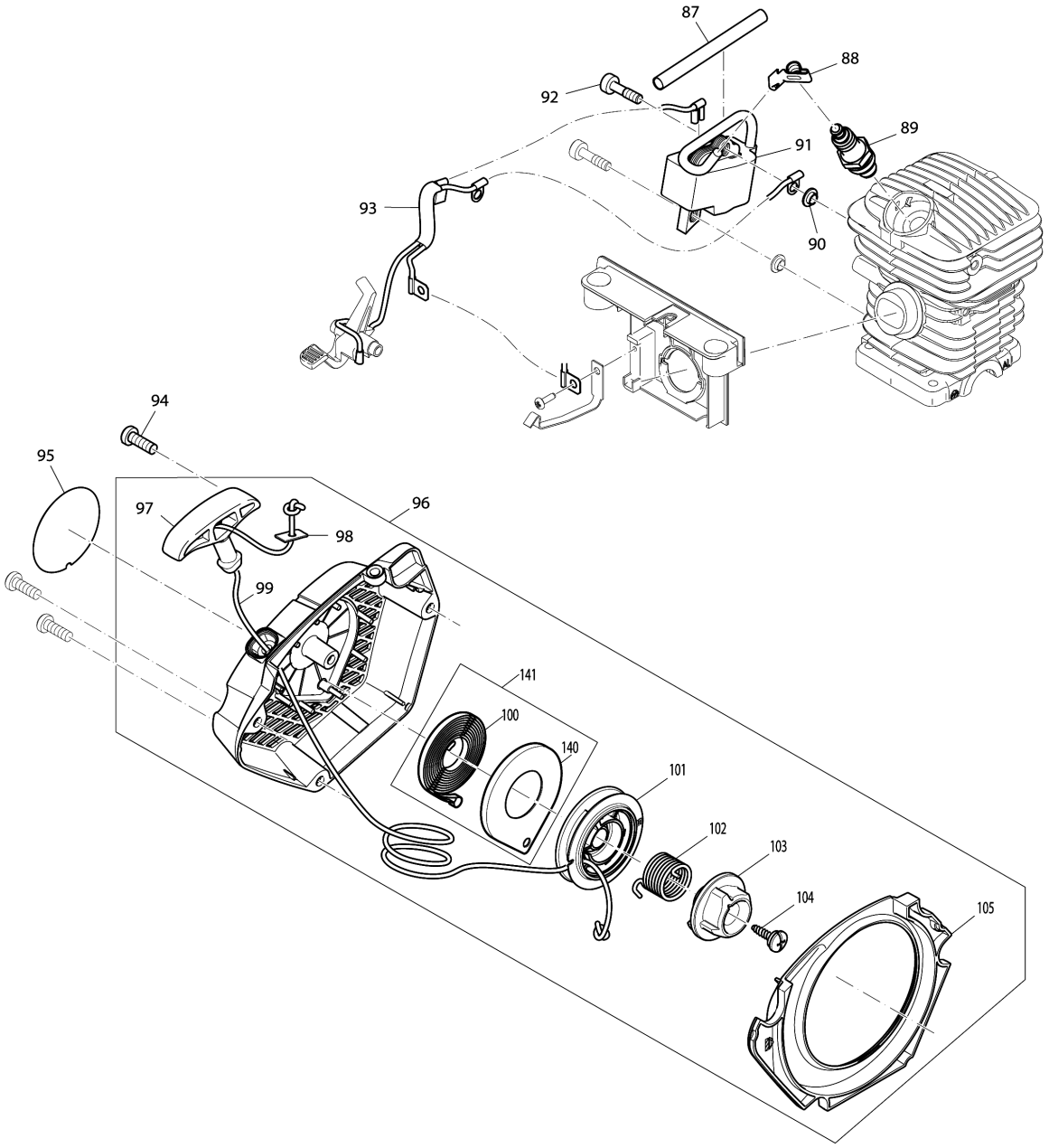

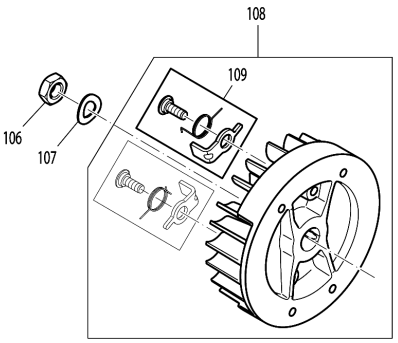

Model No.TEY1201 PETROL CHAIN SAW

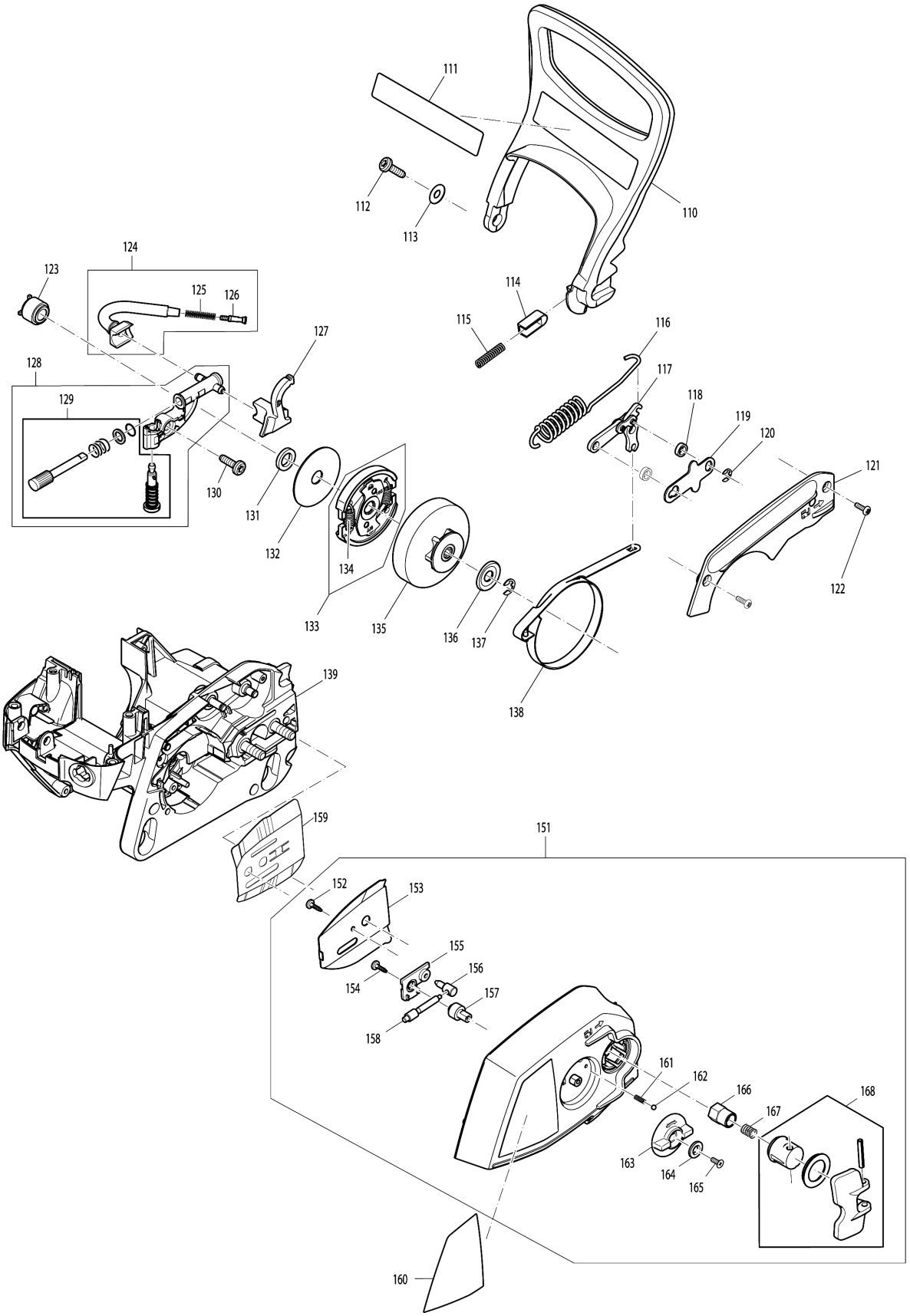

Model No.TEY1201 PETROL CHAIN SAW

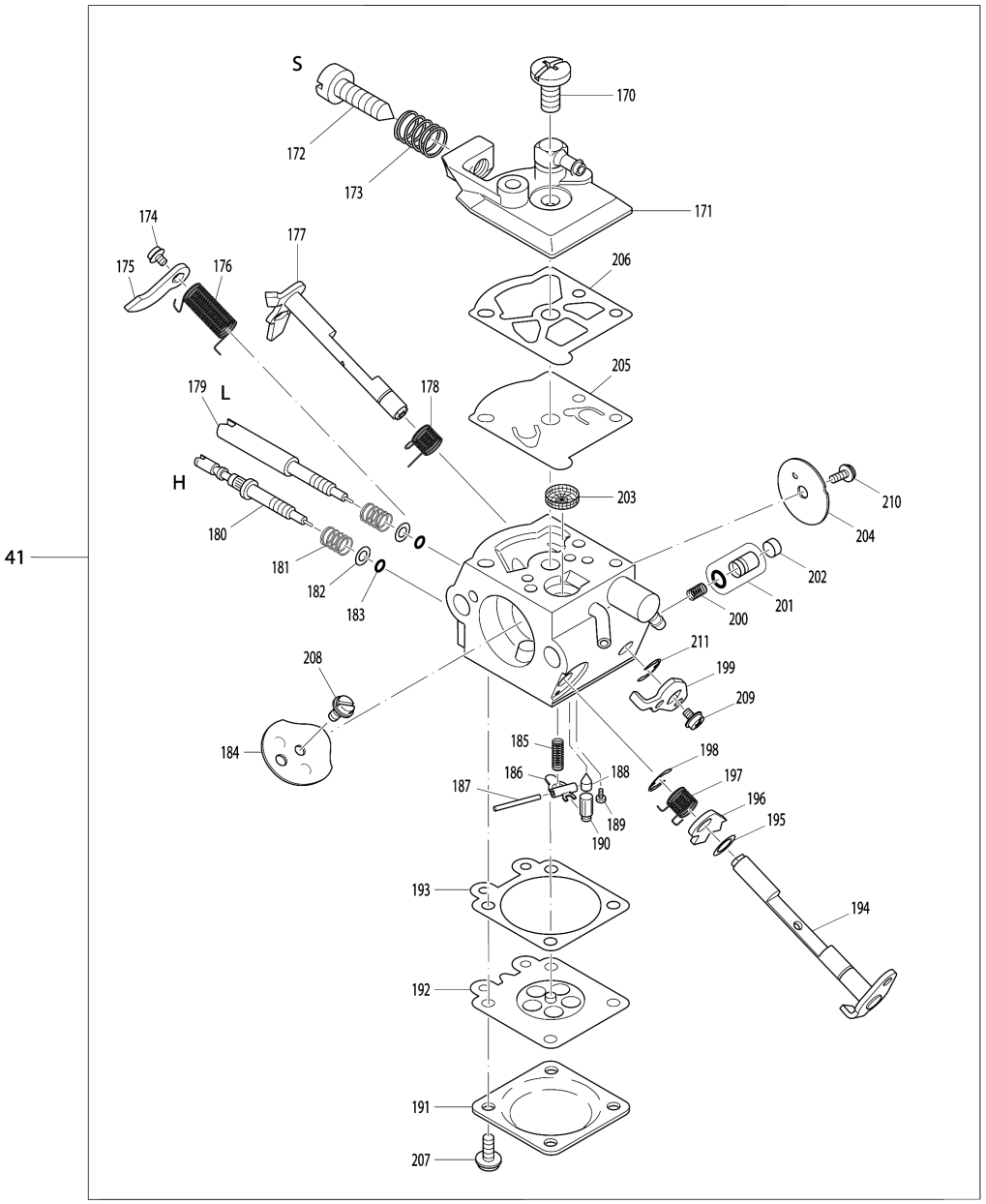

Model No.TEY1201 PETROL CHAIN SAW

รายการ	รหัสอะไหล่	รายละเอียด	การแลกเปลี่ยน	จำนวน	New/Old	ขาย	ซื้อ	ข้อความ
001	168507-3	TANK CAP COMPLETE		1	*			
D10		INC. 2			*			
001-1	168823-3	TANK CAP COMPLETE	O	1				
D10		INC. 2						
002	213080-9	O RING 29.5		1				
003	163447-0	FUEL FILTER		1	*			
003-1	163447-0	FUEL FILTER	O	1				
004	195758-5	TANK ASSEMBLY A BLUE		1				
D10		INC. 5-13						
005	266651-1	H.L. TAPPING SCREW 5.5X16		1				
006	452021-2	GRIP SHELL		1				
007	452020-4	CATCH LEVER		1				
008	231866-9	TORSION SPRING 10		1				
009	452019-9	THROTTLE LEVER		1				
010	195762-4	AIR VALVE SET		1				
011	452018-1	FUEL NIPPLE		1				
012	213586-7	O RING 11.5		1				
013	424456-7	FUEL LINE		1				
014	814B81-8	TEY1201 NAME PLATE		1				
017	452036-9	TUBULAR HANDLE		1				
018	346517-2	CUP WASHER 6		1				
019	234189-4	COMPRESSION SPRING 12		1				
020	266605-8	H.L. SOCKET HEAD BOLT M5X16		1				
021	266651-1	H.L. TAPPING SCREW 5.5X16		1				
022	891898-4	MAKITA LOGO LABEL		1				
023	266651-1	H.L. TAPPING SCREW 5.5X16		4				
024	452031-9	AIR FILTER COVER		1				
025	423414-0	AIR FILTER		1				
026	452030-1	INTAKE MANIFOLD		1				
027	266604-0	H.L. SOCKET HEAD BOLT M4X40		2				
028	424173-9	DAMPING PLUG		2				
029	168398-2	PRIMER PUMP		1				
030	422067-2	TUBE 2.5-55		1				
031	422065-6	TUBE 2.5-112		1				
032	422068-0	TUBE 3-70		1				
033	422066-4	TUBE 2.5-72		1				
034	318634-8	FLANGE RING		1				
035	346413-4	BUSH 17		1				
036	452024-6	INTERMEDIATE FLANGE		1				
037	424340-6	INTAKE HOSE		1				

Please order the parts with part number. Print Date 24/8/2021

Model No.TEY1201 PETROL CHAIN SAW

รายการ	รหัสอะไหล่	รายละเอียด	การแลกเปลี่ยน	จำนวน	New/Old	ขาย	ซื้อ	ข้อความ
038	233971-8	RING SPRING		1				
039	266651-1	H.L. TAPPING SCREW 5.5X16		1				
040	264044-6	SNAP NUT M5		1				
041	168602-9	CARBURETOR		1	*			
D10		INC. 170-211			*			
041-1	168848-7	CARBURETOR	O	1				
D10		INC. 170,171,174-180,184-189						
D20		INC. 191-210,213-217						
042	266421-8	TAPPING SCREW 3X10		1				
043	346290-4	CONTACT SPRING		1				
044	266651-1	H.L. TAPPING SCREW 5.5X16		1				
045	452023-8	HOOD		1	*			
045-1	452023-8	HOOD	O	1				
046	266607-4	H.L. SOCKET HEAD BOLT M5X20		1				
047	325938-1	ANGULAR NIPPLE		1	*			
048	346306-5	COOLING PLATE		1				
049	325939-9	CONNECTING LINK		1				
050	346304-9	GASKET		1				
051	266605-8	H.L. SOCKET HEAD BOLT M5X16		2				
052	168604-5	MUFFLER COMPLETE		1				
D10		INC. 53						
053	346294-6	SPARK ARRESTER SCREEN		1				
054	266606-6	H.L. SOCKET HEAD BOLT M5X40		1				
055	266605-8	H.L. SOCKET HEAD BOLT M5X16		2				
056	195759-3	CYLINDER PISTON SET		1	*			
D10		INC. 57			*			
056-1	196384-3	CYLINDER PISTON SET	S	1				
C10	142136-0	CYLINDER COMPLETE		1				
D10		INC. 57						
057	195760-8	PISTON SET		1				
D10		INC. 58-60						
058	325991-7	PISTON RING 38		1				
059	325992-5	PISTON PIN 8		1				
060	233988-1	RING SPRING 8		1				
061	213582-5	OIL SEAL 12		1	*			
061-1	213084-1	OIL SEAL 12	S	1				
062	211341-1	BALL BEARING 6201		1				
063	212086-4	NEEDLE CAGE 810		1				
064	195956-1	CRANK SHAFT SET		1	*			

Please order the parts with part number. Print Date 24/8/2021

Model No.TEY1201 PETROL CHAIN SAW

รายการ	รหัสอะไหล่	รายละเอียด	การแลกเปลี่ยน	จำนวน	New/Old	ขาย	ซื้อ	ข้อความ
D10		INC. 61,62,65,66			*			
064-1	197539-3	CRANK SHAFT SET	<	1				
D10		INC. 61,62,65,66						
065	211341-1	BALL BEARING 6201		1				
066	213582-5	OIL SEAL 12		1	*			
066-1	213084-1	OIL SEAL 12	S	1				
067	424339-1	CRANK CASE SEALING		1	*			
067-1	424872-3	CRANK CASE SEALING	O	1				
068	318633-0	CRANKCASE UNDERSIDE		1				
069	168507-3	TANK CAP COMPLETE		1	*			
D10		INC. 70			*			
069-1	168823-3	TANK CAP COMPLETE	O	1				
D10		INC. 70						
070	213080-9	O RING 29.5		1				
071	452727-2	PLUG		1	*			
072	266651-1	H.L. TAPPING SCREW 5.5X16		2				
073	234189-4	COMPRESSION SPRING 12		1				
074	816917-5	INDICATION LABEL		1				
075	452025-4	CHOKE LEVER		1				
076	452022-0	THROTTLE LINKAGE		1				
077	266608-2	H.L.TAPPING SCREW 5X40		4				
078	325946-2	BUSH 6		4				
079	234189-4	COMPRESSION SPRING 12		1				
080	266651-1	H.L. TAPPING SCREW 5.5X16		2				
081	234189-4	COMPRESSION SPRING 12		1				
082	266651-1	H.L. TAPPING SCREW 5.5X16		2				
083	266651-1	H.L. TAPPING SCREW 5.5X16		2				
084	168504-9	VENT VALVE		1				
085	346301-5	SPIKE BAR		1				
086	346385-3	HEAT PROTECTION FOIL		1				
087	444029-0	ISOLATING TUBE 6-95		1	*			
087-1	444042-8	ISOLATING TUBE 6-80	<	1				
088	346445-1	SPARK PLUG CONNECTOR		1	*			
088-1	424522-0	PLUG CAP	S	1				
089	168401-9	SPARK PLUG		1				
090	452670-5	ISOLATING WASHER		2				
091	125808-2	IGNITION COIL ASSEMBLY		1	*			
D10		INC. 87,88			*			
091-1	126270-4	IGNITION COIL ASSEMBLY	<	1	*			
C10	326210-4	TERMINAL SPRING		1	*			

Please order the parts with part number. Print Date 24/8/2021

Model No.TEY1201 PETROL CHAIN SAW

รายการ	รหัสอะไหล่	รายละเอียด	การแลกเปลี่ยน	จำนวน	New/Old	ขาย	ซื้อ	ข้อความ
D10		INC. 87,88			*			
091-2	126270-4	IGNITION COIL ASSEMBLY	O	1				
C10	326210-4	TERMINAL SPRING		1				
D10		INC. 87,88						
092	266631-7	H.L. SOCKET HEAD BOLT M5X20		2				
093	168601-1	CABLE HARNESS		1				
094	266651-1	H.L. TAPPING SCREW 5.5X16		3				
095	800T79-9	TEY1201 MODEL NO. LABEL		1				
096	168608-7	STARTER COMPLETE BLUE		1	*			
D10		INC. 97-99,101-105,141			*			
096-1	161328-2	STARTER COMPLETE BLUE	O	1				
D10		INC. 97-99,101-105,141						
097	453783-5	STARTER GRIP		1				
098	267847-7	SQUARE WASHER 4		1				
099	444038-9	STARTER ROPE		1				
100	234252-3	REWIND SPRING		1	*			
101	453785-1	REEL		1	*			
101-1	455919-2	REEL	X	1				
102	234253-1	TORSION SPRING 20		1				
103	453786-9	CAM PLATE		1				
104	266777-9	TAPPING SCREW 5X12		1				
105	452026-2	AIR GUIDE PLATE		1				
106	264053-5	HEX. NUT M8X1		1				
107	267822-3	SPRING WASHER 8		1				
108	140480-9	FLYWHEEL COMPLETE		1				
D10		INC. 109						
109	195761-6	RATCHET SET		2				
110	452032-7	HAND GUARD		1				
111	810075-9	CAUTION LABEL		1	*			
111-1	817T83-1	CAUTION LABEL	<	1	*			
111-2	818L12-9	CAUTION LABEL	<	1				
112	266627-8	H.L. TAPPING SCREW 4.7X16		1				
113	267066-5	FLAT WASHER 5		1				
114	313212-9	HAND GUARD GUIDE		1				
115	234210-9	COMPRESSION SPRING 3		1				
116	231868-5	TENSION SPRING 10		1				
117	163500-2	LINK PLATE COMPLETE		1				
118	325947-0	BUSH 6		2				
119	346299-6	SPACER SHEET METAL		1				
120	961011-9	STOP RING E-4		1				

Please order the parts with part number. Print Date 24/8/2021

Model No.TEY1201 PETROL CHAIN SAW

รายการ	รหัสอะไหล่	รายละเอียด	การแลกเปลี่ยน	จำนวน	New/Old	ขาย	ซื้อ	ข้อความ
121	452033-5	BRAKE COVER		1	*			
121-1	458425-6	BRAKE COVER	S	1				
122	266421-8	TAPPING SCREW 3X10		2				
123	452035-1	PUMP DRIVE		1				
124	168645-1	OIL SUCTION LINE COMPLETE		1				
D10		INC. 125,126						
125	234207-8	COMPRESSION SPRING 6		1				
126	452666-6	NIPPLE		1				
127	424342-2	OIL PRESSURE LINE		1				
128	168503-1	OIL PUMP COMPLETE		1	*			
D10		INC. 129			*			
128-1	161346-0	OIL PUMP COMPLETE	<	1				
129	195872-7	OIL PUMP ADJUSTMENT SET		1	*			
130	266627-8	H.L. TAPPING SCREW 4.7X16		1				
131	267430-0	FLAT WASHER 10		1				
132	267431-8	FLAT WASHER 10		1				
133	168607-9	CLUTCH COMPLETE		1				
D10		INC. 134						
134	231873-2	TENSION SPRING 5		2				
135	140980-9	CLUTCH DRUM ASSEMBLY		1	*			
135-1	140484-1	CLUTCH DRUM ASSEMBLY	S	1	*			
135-2	140A30-6	CLUTCH DRUM ASSEMBLY	<	1	*			
135-3	140M30-8	CLUTCH DRUM COMPLETE	<	1				
136	267451-2	FLAT WASHER 8		1	*			
136-1	267833-8	CUP WASHER 8	S	1				
137	259033-4	RETAINING RING E TYPE 6		1				
138	346298-8	BRAKE BAND		1	*			
138-1	347363-6	BRAKE BAND	S	1				
139	140482-5	ENGINE HOUSING COMPLETE TLC B		1	*			
139-1	140A09-7	ENGINE HOUSING COMPLETE TLC B	<	1				
140	453784-3	SPRING CASSETTE		1	*			
141	195955-3	REWIND SPRING SET		1				
D10		INC. 100,140			*			
151	140510-6	SPROCKET GUARD TLC COMPLETE B		1	*			
D10		INC. 152-158,161-168			*			
151-1	142783-7	SPROCKET GUARD TLC COMP. BLUE	O	1				
D10		INC. 152-158,160-168,218						
152	266007-8	TAPPING SCREW BIND PT 3X10		1				
153	346309-9	GUIDE PLATE		1	*			

Please order the parts with part number. Print Date 24/8/2021

Model No.TEY1201 PETROL CHAIN SAW

รายการ	รหัสอะไหล่	รายละเอียด	การแลกเปลี่ยน	จำนวน	New/Old	ขาย	ซื้อ	ข้อความ
153-1	346309-9	GUIDE PLATE	<	1				
154	266007-8	TAPPING SCREW BIND PT 3X10		1				
155	417403-5	COVER		1				
156	324068-5	ADJUST PIN		1				
157	226681-4	HELICAL GEAR 17		1				
158	226534-7	HELICAL GEAR 8		1				
159	346518-0	GUIDE PLATE		1				
160	892502-8	INDICATION LABEL		1				
161	233033-2	COMPRESSION SPRING 4		1				
162	216008-6	STEEL BALL 4		1				
163	419233-0	DIAL 40		1				
164	253874-0	FLAT WASHER 4		1				
165	915106-0	BINDING HEAD SCREW M4X8		1				
166	264042-0	HEX. NUT M8-13		1	*			
166-1	264099-1	HEX.NUT M8-13	S	1				
167	231025-5	COMPRESSION SPRING 8		1				
168	195764-0	WING GRIP SET		1	*			
168-1	195764-0	WING GRIP SET	O	1				
170	WJ00096166	SCREW		1	*			
170-1	ZJ17004010	SCREW (PUMP COVER)	X	1	*			
170-2	ZJ00000020	SCREW (PUMP COVER)	O	1				
171	WJ00213750	COVER ASSEMBLY-PUMP		1	*			
171-1	ZJ0K017704	COVER KIT, PUMP	X	1	*			
171-2	ZJ00000004	COVER KIT,PUMP	O	1				
172	WJ00096369	SCREW-IDLE ADJ.		1	*			
173	WJ00098356	SPRING		1	*			
174	WJ00096475	SCREW		1	*			
174-1	ZJ17103004	SCREW	X	1	*			
174-2	ZJ00000023	SCREW	O	1				
175	WJ00183519	LEVER-CHOKE		1	*			
175-1	ZJ00042706	LEVER, CHOKE	X	1	*			
175-2	ZJ00000025	LEVER,CHOKE	O	1				
176	WJ00983585	SPRING		1	*			
176-1	ZJ00013113	SPRING,RETURN	X	1	*			
176-2	ZJ00000040	SPRING,THROTTLE RETURN	O	1				
177	WJ00223556	SHAFT ASSEMBLY-THROTTLE		1	*			
177-1	ZJ0A011716	SHAFT ASS'Y, THROTTLE	X	1	*			
177-2	ZJ00000015	THROTTLE SHAFT ASSY	O	1				
178	WJ00098494	SPRING		1	*			
178-1	ZJ00013039	SPRING, THROTTLE RETURN	X	1	*			

Please order the parts with part number. Print Date 24/8/2021

Model No.TEY1201 PETROL CHAIN SAW

รายการ	รหัสอะไหล่	รายละเอียด	การแลกเปลี่ยน	จำนวน	New/Old	ขาย	ซื้อ	ข้อความ
178-2	ZJ00000034	SPRING,THROTTLE RETURN	O	1				
179	WJ01023908	NEEDLE-IDLE		1	*			
179-1	ZJ00031706	SCREW, IDLE MIXTURE	X	1	*			
179-2	ZJ00000026	SCREW,IDLE MIXTURE	O	1				
180	WJ01024001	NEEDLE-HIGH SPEED		1	*			
180-1	ZJ00030705	SCREW, MAIN MIXTURE	X	1	*			
180-2	ZJ00000039	SCREW,MAIN MIXTURE	O	1				
181	WJ00098404	SPRING		2	*			
182	WJ00136152	WASHER		2	*			
183	WJ00016105	O RING		2	*			
184	WJ00062150	VALVE-CHOKE		1	*			
184-1	ZJ00043701	VALVE, CHOKE	X	1	*			
184-2	ZJ00000024	VALVE,CHOKE	O	1				
185	WJ00983270	SPRING		1	*			
185-1	ZJ00019009	SPRING, METERING LEVER	X	1	*			
185-2	ZJ00000010	SPRING, METERING LEVER	O	1				
186	WJ00166114	LEVER-METERING		1	*			
186-1	ZJ00020012	LEVER, METERING	X	1	*			
186-2	ZJ00000006	LEVER	O	1				
187	WJ00014477	METERING LEVER PIN		1	*			
187-1	ZJ00021001	PIN	X	1	*			
187-2	ZJ00000008	PIN	O	1				
188	WJ00008282	INLET NEEDLE VALVE		1	*			
188-1	ZJ00018004	VALVE, INLET NEEDLE	X	1	*			
188-2	ZJ00000007	VALVE, INLET NEEDLE	O	1				
189	WJ00963226	SCREW		1	*			
189-1	ZJ14803006	SCREW	X	1	*			
189-2	ZJ00000009	SCREW (METERING LEVER PIN)	O	1				
190	WJ00088271	PLUG-WELCH		1	*			
191	WJ00021158	METERING DIAPHRAGM COVER		1	*			
191-1	ZJ00028704	COVER, METERING	X	1	*			
191-2	ZJ00000028	COVER,METERING	O	1				
192	WJ00095613	DIAPHRAGM ASSEMBLY-METERING		1	*			
192-1	ZJ0A015049	DIAPHRAGM ASS'Y, METERING	X	1	*			
192-2	ZJ00000013	DIAPHRAGM ASS'Y,METERING	O	1				
193	WJ00092192	GASKET-METERING DIAPHRAGM		1	*			
193-1	442183-4	METERING DIAPHRAGM GASKET	O	1	*			
193-2	ZJ00016019	GASKET,METERING CHAMBER	X	1	*			

Please order the parts with part number. Print Date 24/8/2021

Model No.TEY1201 PETROL CHAIN SAW

รายการ	รหัสอะไหล่	รายละเอียด	การแลกเปลี่ยน	จำนวน	New/Old	ขาย	ซื้อ	ข้อความ
193-3	ZJ00000011	GASKET,METERING CHAMBER	O	1				
194	WJ00223784	SHAFT ASSEMBLY-CHOKE		1	*			
194-1	ZJ0A041704	SHAFT ASS'Y,CHOKE	X	1	*			
194-2	ZJ00000012	SHAFT ASSY,CHOKE	O	1				
195	WJ00013690	WASHER		1	*			
195-1	ZJ00026037	WASHER	X	1	*			
195-2	ZJ00000033	WASHER	O	1				
196	WJ00016682	LEVER-FAST IDLE		1	*			
196-1	ZJ00042703	LEVER,CHOKE	X	1	*			
196-2	ZJ00000031	LEVER,CHOKE	O	1				
197	WJ00983584	SPRING		1	*			
197-1	ZJ00013149	SPRING,CHOKE RETURN	X	1	*			
197-2	ZJ00000032	SPRING,CHOKE RETURN	O	1				
198	WJ00001673	RETAINING RING		1	*			
198-1	ZJ19510040	E-RING	X	1	*			
198-2	ZJ00000017	E-RING	O	1				
199	WJ00183366	LEVER-THROTTLE		1	*			
199-1	ZJ00012705	LEVER,THROTTLE	X	1	*			
199-2	ZJ00000022	LEVER,THROTTLE	O	1				
200	WJ00983164	SPRING		1	*			
200-1	ZJ00054057	SPRING	X	1	*			
200-2	ZJ00000019	SPRING	O	1	*			
200-3	ZJ00000073	SPRING	O	1				
201	WJ00160511	PISTON ASSMBLY-ACCELERATOR		1	*			
201-1	ZJ0K053049	PLUNGER KIT	X	1	*			
201-2	ZJ00000005	PLUNGER KIT	O	1				
202	WJ00088229	CUP PLUG		1	*			
202-1	ZJ00005048	PLUG,ACC POCKET	X	1	*			
202-2	ZJ00000036	PLUG,ACC POCKET	O	1				
203	WJ00014070	INLET SCREEN		1	*			
203-1	ZJ00004011	STRAINER	X	1	*			
203-2	ZJ00000003	STRAINER	O	1				
204	WJ00343439	VALVE-THROTTLE		1	*			
204-1	ZJ00014040	VALVE,THROTTLE	X	1	*			
204-2	ZJ00000030	VALVE,THROTTLE	O	1				
205	WJ00009589	PUMP DIAPHRAGM		1	*			
205-1	ZJ00015050	DIAPHRAGM,PUMP	X	1	*			
205-2	ZJ00000029	DIAPHRAGM, PUMP	O	1				
206	WJ00092225	GASKET-PUMP		1	*			
206-1	ZJ00016033	GASKET,PUMP	X	1	*			

Please order the parts with part number. Print Date 24/8/2021

Model No.TEY1201 PETROL CHAIN SAW

รายการ	รหัสอะไหล่	รายละเอียด	การแลกเปลี่ยน	จำนวน	New/Old	ขาย	ซื้อ	ข้อความ
206-2	ZJ00000016	GASKET, PUMP	O	1				
207	WJ00096589	SCREW ASSEMBLY		4	*			
207-1	ZJ17203006	SCREW (WITH SERRATION)	X	2	*			
207-2	ZJ00000014	SCREW (WITH SERRATION)	O	2				
208	WJ00096475	SCREW		1	*			
208-1	ZJ00000001	SCREW	X	1				
209	WJ00096475	SCREW		1	*			
209-1	ZJ17103004	SCREW	X	1	*			
209-2	ZJ00000023	SCREW	O	1				
210	WJ00096475	SCREW		1	*			
210-1	ZJ00000001	SCREW	X	1				
211	WJ00001673	RETAINING RING		1	*			
212	424519-9	HOOD CAP		1				
213	ZJ0A001726	BODY,ASS'Y		1	*			
213-1	ZJ00000038	BODY,ASS'Y	O	1	*			
214	ZJ0A007710	NOZZLE ASS'Y,CHECK VALVE		1	*			
214-1	ZJ00000018	NOZZLE ASS'Y,CHECK VALVE	O	1				
215	ZJ00052019	COLLAR		1	*			
215-1	ZJ00000021	COLLAR	O	1				
216	ZJ00009030	RETAINER		2	*			
216-1	ZJ00000035	RETAINER	O	2				
217	ZJ00004002	STRAINER		1	*			
217-1	ZJ00000037	STRAINER	O	1				
218	267858-2	LOCK WASHER 8	S	1				
A01A	165245-8	GUIDE BAR 12		1	*			
A01B	165200-0	GUIDE BAR 12		1	*			
A01-1A	165245-8	GUIDE BAR 12	O	1	*			
A01-1B	165200-0	GUIDE BAR 12	O	1	*			
A01-2A	165245-8	GUIDE BAR 12	O	1				
A01-2B	165200-0	GUIDE BAR 12	O	1				
A02	419559-0	CHAIN PROTECTION COVER 330		1				
A03A	531290046	SAW CHAIN 12″		1	*			
A03B	195398-9	SAW CHAIN SET		1	*			
A03-1A	196740-7	SAW CHAIN SET	O	1				
A03-1B	196206-7	SAW CHAIN SET	O	1				
A04	782026-1	UNIVERSAL WRENCH 13/16		1				
A05	783012-5	SCREWDRIVER		1				
A06B	195957-9	OIL SET		1	*			
A06-1B	980008606	OIL SET	O	1	*			
A06-2B	195957-9	OIL SET	O	1	*			

Please order the parts with part number. Print Date 24/8/2021

Model No.TEY1201 PETROL CHAIN SAW

รายการ	รหัสอะไหล่	รายละเอียด	การแลกเปลี่ยน	จำนวน	New/Old	ขาย	ซื้อ	ข้อความ
A06-3B	195957-9	OIL SET	<	1				

Please order the parts with part number.

Print Date 24/8/2021