M2401B

Oct 2022

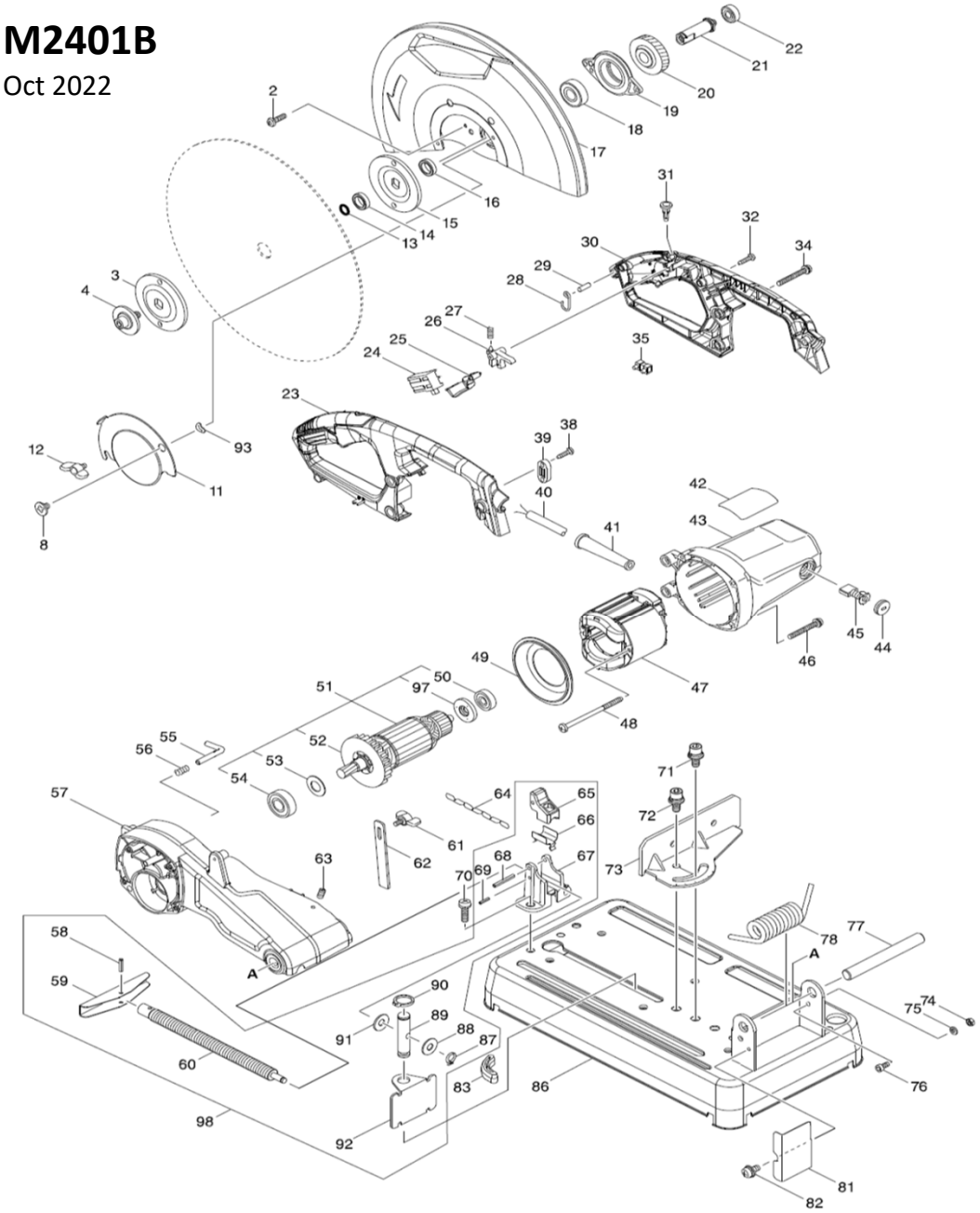

No.	CODE	DESCRIPTION	ราคาตั้ง
2	265122-5	PAN HEAD SCREW M5X20	70
3	224299-5	FLANGE 90	280
4	251498-6	HEX SOCKET HEAD BOLT M10X25	180
8	265121-7	+ FLAT HEAD SCREW M6	90
11	347086-6	CENTER CAP	190
12	265754-8	THUMB SCREW M6X12	60
13	213180-5	O RING 14	70
14	257255-0	RING 17	70
15	224299-5	FLANGE 90	280
16	257255-0	RING 17	70
17	161551-9	SAFETY COVER	1,150
18	210155-5	BALL BEARING 6203ZZ	160
19	316527-3	BEARING BOX	660
20	221462-1	HELICAL GEAR 43	500
21	326790-0	SPINDLE	230
22	210199-5	BALL BEARING 6000ZZ	
23	183E50-1	HANDLE SET	460
24	651067-7	SWITCH	210
25	418141-2	SWITCH LEVER	70
26	418139-9	SWITCH LOCK	60
27	231397-8	COMPRESSION SPRING 4	50
28	281216-8	HANGER	70
29	268101-2	PIN 6	70
30	183E50-1	HANDLE SET	460
31	418138-1	SWITCH BUTTON	70
32	266841-6	TAPPING SCREW 4X18	20
34	265104-7	PAN HEAD SCREW M5X40	100
38	266841-6	TAPPING SCREW 4X18	20
39	687140-7	STRAIN RELIEF	40
40	691788-9	POWER SUPPLY CORD 0.75-2-2.5	
41	682574-9	CORD GUARD 10-90	90
43	144055-6	MOTOR HOUSING COMPLETE	790
44	644802-0	HOLDER CAP	60
45	B-80341	CARBON BRUSH SET CB-203A	
46	265104-7	PAN HEAD SCREW M5X40	100
47	593948-8	FIELD ASS'Y 220V	
48	265A45-3	TAPPING SCREW 5X80	
49	418143-8	BAFFLE PLATE	110
50	210070-3	BALL BEARING 6200ZZ	180
51	513493-7	ARMATURE ASS'Y 220V	
52	240003-4	FAN 80	260

No.	CODE	DESCRIPTION	ราคาตั้ง
53	267274-8	FLAT WASHER 15	70
54	210156-3	BALL BEARING 6202ZZ	
55	322665-1	STOPPER	150
56	233372-0	COMPRESSION SPRING 7	70
57	144057-2	GEAR HOUSING COMPLETE	1,730
57	263029-9	RUBBER PIN 6	70
58	951163-4	SPRING PIN 5-20	50
59	271431-2	HANDLE 120	110
60	326802-9	VISE SCREW	440
61	265754-8	THUMB SCREW M6X12	60
62	347084-0	STOPPER PLATE	80
63	251961-9	H.S.SET SCREW(FLAT POINT)M6X10	40
64	282015-1	CHAIN	140
65	313114-9	VISE NUT	250
66	347083-2	PLATE	70
67	319474-7	SCREW GUIDE	200
68	951175-7	SPRING PIN 5-36	80
69	951110-5	SPRING PIN 4-16	30
70	265A65-7	PAN HEAD SCREW M8X30	
71	251499-4	H. S. HEAD BOLT M10X25 WITH WG	110
72	251499-4	H. S. HEAD BOLT M10X25 WITH WG	110
73	345315-1	GUIDE PLATE	310
74	931302-2	HEX. NUT M6	70
75	253428-3	SPRING WASHER 6	
76	922312-0	HEX. SOCKET HEAD BOLT M6X12	110
77	326801-1	ROD 16	210
78	232325-6	TORSION SPRING 20	270
81	345313-5	SPARK GUARD	130
82	911313-3	PAN HEAD SCREW M6X12 WITH	100
83	421834-2	CUSHION	90
86	161528-4	BASE	1,770
87	961004-6	RETAINING RING S-8	20
88	267257-8	FLAT WASHER 8	70
89	256474-5	SHOULDER PIN 10-16	180
90	961056-7	RETAINING RING S-16	40
91	267257-8	FLAT WASHER 8	70
92	347085-8	VISE PLATE	150
93	253903-9	WAVE WASHER 6	90
97	681630-2	INSULATION WASHER	150
98	135841-6	VISE ASS'Y	1,120
A01	783023-0	HEX. WRENCH 8	